Internal Use Only

Service Manual

GT540

Service Manual

Model : GT540

Date: April, 2010 / Issue 1.0

Table Of Contents

1. Introduction

1.1. Purpose

This manual provides the information necessary to repair, calibration, description and download the features of this model.

1.2. Regulatory Information

A. Security

Toll fraud, the unauthorized use of telecommunications system by an unauthorized part (for example, persons other than your company's employees, agents, subcontractors, or person working on your company's behalf) can result in substantial additional charges for your telecommunications services. System users are responsible for the security of own system. There are may be risks of toll fraud associated with your telecommunications system. System users are responsible for programming and configuring the equipment to prevent unauthorized use. The manufacturer does not warrant that this product is immune from the above case but will prevent unauthorized use of common carrier telecommunication service of facilities accessed through or connected to it. The manufacturer will not be responsible for any charges that result from such unauthorized use.

B. Incidence of Harm

If a telephone company determines that the equipment provided to customer is faulty and possibly causing harm or interruption in service to the telephone network, it should disconnect telephone service until repair can be done. A telephone company may temporarily disconnect service as long as repair is not done.

C. Changes in Service

A local telephone company may make changes in its communications facilities or procedure. If these changes could reasonably be expected to affect the use of the phones or compatibility with the net work, the telephone company is required to give advanced written notice to the user, allowing the user to take appropriate steps to maintain telephone service.

D. Maintenance Limitations

Maintenance limitations on the phones must be performed only by the manufacturer or its authorized agent. The user may not make any changes and/or repairs expect as specifically noted in this manual. Therefore, note that unauthorized alternations or repair may affect the regulatory status of the system and may void any remaining warranty.

E. Notice of Radiated Emissions

This model complies with rules regarding radiation and radio frequency emission as defined by local regulatory agencies. In accordance with these agencies, you may be required to provide information such as the following to the end user.

F. Pictures

The pictures in this manual are for illustrative purposes only; your actual hardware may look slightly different.

G. Interference and Attenuation

A phone may interfere with sensitive laboratory equipment, medical equipment, etc. Interference from unsuppressed engines or electric motors may cause problems.

H. Electrostatic Sensitive Devices

ATTENTION

Boards, which contain Electrostatic Sensitive Device (ESD), are indicated by the sign. Following information is ESD handling:

• Service personnel should ground themselves by using a wrist strap when exchange system boards. • When repairs are made to a system board, they should spread the floor with anti-static mat which is also grounded.
• Use a suitable, grounded soldering iron. • Keep sensitive parts in these protective packages until these are used.
• When returning system boards or parts like EEPROM to the factory, use the protective package as described.

2. Performance

2.1 Product Name

GT540 : WCDMA900/2100+EGSM/GSM850/DCS/PCS
(HSDPA 7.2Mbps GPRS Class 12 / EDGE Class 12)

2.2 Supporting Standard

Item	Feature	Comment
Supporting Standard	WCDMA(FDD1,8)/EGSM/GSM850/DCS1800/PCS1900 with seamless handover Phase 2+(include AMR) SIM Toolkit: Class 1, 2, 3, C-E	
Frequency Range	WCDMA(FDD1) TX : 1920 – 1980 MHz WCDMA(FDD1) RX : 2110 – 2170 MHz WCDMA(FDD8) TX : 880 – 915 MHz WCDMA(FDD8) RX : 925 – 960 MHz EGSM TX: 880 – 915 MHz EGSM RX: 925 – 960 MHz GSM850 TX: 824 – 849 MHz GSM850 RX: 869 – 894 MHz DCS1800 TX : 1710 – 1785 MHz DCS1800 RX: 1805 – 1880 MHz PCS1900 TX: 1850 – 1910 MHz PCS1900 RX: 1930 – 1990 MHz	
Application Standard	JAVA 2.0	

2.3 Main Parts : GSM Solution

Item	Part Name	Comment
Digital Baseband	MSM7227 : Qualcomm	
Analog Baseband	PM7540 : Qualcomm	
RF Chip	RTR6285 : Qualcomm	

2.4 HW Features

Item		Feature	Comment
Form Factor		Bar type	
Battery		1) Capacity Standard : Li-Ion polymer, 1500mAh	
		2) Packing Type : Soft Pack	
Size		Standard : 109 x 54.5 x 12.9 mm	
Weight		115.5g With Battery	
Volume		TBD	
PCB		All Layer (10) , 0.8t	
Stand by time		2G Up to 350 hrs 3G Up to 3500 hrs	@ Paging Period 5 (2G) @ DRX 7 (3G)
Charging time		3 hrs	@ Power Off / 1500mAh
Talk time		2G Up to 250mins 3G Up to 250mins	@ Power Level 5 (2G) @ Tx = 12dBm (3G)
RX sensitivity		WCDMA(FDD1) : -106.7 dBm WCDMA(FDD8) : -103.7 dBm EGSM : -105 dBm GSM850 : -105 dBm DCS 1800 : -105 dBm PCS 1900 : -105 dBm	
TX output power	WCDMA/ GSM/ GPRS	WCDMA : 24dBm/3.84MHz,+1/-3dBm EGSM : 33dBm GSM850 : 33 dBm DCS 1800 : 30 dBm PCS 1900 : 30 dBm	Class3(WCDMA) Class4 (EGSM) Class4 (GSM850) Class1 (PCS) Class1 (DCS)
	EDGE	GSM 900 : 27 dBm DCS 1800 : 26 dBm PCS 1900 : 26 dBm	E2 (GSM900) E2 (PCS) E2 (DCS)
GPRS compatibility		GPRS Class 12	
EDGE compatibility		EDGE Class 12	
SIM card type		Plug-In SIM 3V /1.8V	
Display		Main LCD TFT Main LCD(3', 320 x 480)	
Built-in Camera		3M CMOS Camera	

Status Indicator	No	
Keypad	Function Key : 2 Side Key : 2	Function Key: CAM, Search Side Key : Volume up/down
ANT	Main : Internal Fixed Type	
System connector	5 Pin	
Ear Phone Jack	3.5Phi, 4 Pole, Stereo	
PC synchronization	No	
Memory	NAND Flash : 4Gbit SDRAM : 2Gbit	
Speech coding	FR, EFR, HR,AMR	
Data & Fax	Built in Data & Fax support	
Vibrator	Built in Vibrator	
Blue Tooth	V2.1+ EDR	
MIDI(for Buzzer Function)	SW Decoded 72Poly	
Music Player	MP3/ WMA/AAC/HE-AAC/EAAC+	
Video Player	MPEG4, H.263, H.264, WMV9	
Camcorder	MPEG4, H.263,	
Voice Recording	Yes	
Speaker Phone mode Support	Yes	
Travel Adapter	Yes	
CDROM	Yes	
Stereo Headset	Yes	
Data Cable	Yes	
T-Flash (External Memory)	Yes	

2.5 SW Features

Item	Feature	Comment
RSSI	0 ~ 4 Levels	
Battery Charging	0 ~ 6 Levels	
Key Volume	0 ~ 7 Level	
Audio Volume	1 ~ 15 Level	
Time / Date Display	Yes	
Multi-Language	Yes	English/French/German/Spanish/Italia n/Danish/Dutch/Korean
Quick Access Mode	Dialing/ Contact / Menu / Message / Camera	
PC Sync	No	
Speed Dial	No	Voice mail center -> 1 key
Profile	Yes	not same with feature phone setting
CLIP / CLIR	Yes	
Phone Book	Name / Number / Email / Chat Id/ Website/Postal addresses/Organizations/Groups/ BirthdayNotes / Ringtone	There is no limitation on the number of items. It depends on available memory amount.
Last Dial Number	Yes	Last Dial Numbers, Last Received Numbers and Last Missed Numbers can store up to a total of 500.
Last Received Number	Yes	Last Dial Numbers, Last Received Numbers and Last Missed Numbers can store up to a total of 500.
Last Missed Number	Yes	Last Dial Numbers, Last Received Numbers and Last Missed Numbers can store up to a total of 500.
Search by Number / Name	Name	
Group	Yes	There is no limitation on the number of items. It depends on available memory amount.
Fixed Dial Number	Yes	
Service Dial Number	No	
Own Number	Yes	Read only (add/edit/delete are not

		supported)
Voice Memo	Yes	
Call Reminder	No	
Network Selection	Automatic	
Mute	Yes	
Call Divert	Yes	
Call Barring	Yes	
Call Charge (AoC)	Yes	
Call Duration	Yes	
SMS (EMS)	There is no limitation on the number of items. It depends on available memory amount.	EMS does not support.
SMS Over GPRS	No	
EMS Melody / Picture	No	
Send / Receive / Save	No	
MMS MPEG4 Send / Receive / Save	Yes	
Long Message	MAX 459 characters	SMS 3pages
Cell Broadcast	Yes	
Download	Over the Web	
Game	Yes	
Calendar	Yes	
Memo	Yes	There is no limitation on the number of items. It depends on available memory amount.
World Clock	No	
Unit Convert	No	
Stop Watch	No	
Wall Paper	Yes	
WAP Browser	No	Support only web browser based on webkit. WAP stack and wml are not supported.
Download Melody / Wallpaper	Yes	Over web browser

2. Performance

SIM Lock	Yes	Operator Dependent
SIM Toolkit	Class 1, 2, 3, C	
MMS	Yes	Google MMS Client
EONS	Yes	
CPHS	Yes	V4.2
ENS	No	
Camera	Yes	3M AF / Digital Zoom : x4
JAVA	Yes	CLDC V1.1 / MIDP V2.1 Download Over Web But JAVA is not supported for VDF and BYT
Voice Dial	No	
IrDa	No	
Bluetooth	Yes	Ver. 2.1+EDR (HSP,HFP,A2DP,AVRCP)
FM radio	Yes	
GPRS	Yes	Class 12
EDGE	Yes	Class 12
Hold / Retrieve	Yes	
Conference Call	Yes	Max. 6
DTMF	Yes	
Memo pad	No	
TTY	No	
AMR	Yes	
SyncML	Yes	
IM	Yes	
Email	Yes	

2.6. HW SPEC.

1) GSM transceiver specification

Item	Specification
Phase Error	Rms : 5° Peak : 20°
Frequency Error	GSM : 0.1 ppm DCS/PCS : 0.1 ppm
EMC(Radiated Spurious Emission Disturbance)	GSM/DCS : < -28dBm
Transmitter Output power and Burst Timing	GSM : 5dBm – 33dBm ± 3dB DCS/PCS : 0dBm – 30dBm ± 3dB
Burst Timing	<3.69us
Spectrum due to modulation out to less than 1800kHz offset	200kHz : -36dBm 600kHz : -51dBm/-56dBm
Spectrum due to modulation out to larger than 1800kHz offset to the edge of the transmit band	GSM : 1800-3000kHz :< -63dBc(-46dBm) 3000kHz-6000kHz : <-65dBc(-46dBm) 6000kHz < : < -71dBc(-46dBm) DCS : 1800-3000kHz :< -65dBc(-51dBm) 6000kHz < : < -73dBc(-51dBm)
Spectrum due to switching transient	400kHz : -19dBm/-22dBm(5/0), -23dBm 600kHz : -21dBm/-24dBm(5/0), -26dBm
Reference Sensitivity – TCH/FS	Class II(RBER) : -105dBm(2.439%)
Usable receiver input level range	0.012(-15 - -40dBm)
Intermodulation rejection – Speech channels	± 800kHz, ± 1600kHz : -98dBm/-96dBm (2.439%)
AM Suppression – GSM : -31dBm - DCS : -29dBm	-98dBm/-96dBm (2.439%)
Timing Advance	± 0.5T

2) WCDMA transmitter specification

Item	Specification
Transmit Frequency	Band1 : 1920 MHz ~ 1980 MHz Band8 : 880MHz~915MHz
Maximum Output Power	+24 dBm / 3.84 MHz, +1 / -3 dB
Frequency Error	within ±0.1 PPM
Open Loop Power Control	Normal Conditions : within ±9 dB, Extreme Conditions : within ±12 dB
Minimum Transmit Power	< -50 dBm /3.84 MHz
Occupied Bandwidth	< 5 MHz at 3.84 Mcps (99% of power)
Adjacent Channel Leakage Power Ratio (ACLR)	> 33 dB @ ±5 MHz, > 43 dB @ ±10 MHz
Spurious Emissions |f-fc| > 12.5 MHz	< -36 dBm / 1 kHz RW @ 9 kHz ≤ f < 150 kHz < -36 dBm / 10 kHz RW @ 150 KHz ≤ f < 30 MHz < -36 dBm / 100 kHz RW @ 30 MHz ≤ f < 1 GHz < -30 dBm / 1 MHz RW @ 1 GHz ≤ f < 12.75 GHz < -60 dBm / 3.84 MHz RW @ 869 MHz ≤ f ≤ 894 MHz < -60 dBm / 3.84 MHz RW @ 1930 MHz ≤ f ≤ 1900 MHz < -60 dBm / 3.84 MHz RW @ 2110 MHz ≤ f ≤ 2155 MHz < -67 dBm / 100 kHz RW @ 925 MHz ≤ f ≤ 935 MHz < -79 dBm / 100 kHz RW @ 935 MHz < f ≤ 960 GHz < -71 dBm / 100 kHz RW @ 1805 MHz ≤ f ≤ 1880 MHz < -41 dBm / 300 kHz RW @ 1884.5 MHz < f < 1919.6 MHz
Transmit Intermodulation	< -31 dBc @ 5 MHz & < -41 dBc @ 10 MHz when Interference CW Signal Level = -40 dBc
Error Vector Magnitude	< 17.5 %, when Pout ≥ -20 dBm
Peak Code Domain Error	< -15 dB at Pout ≥ -20 dBm

3) WCDMA receiver specification

Item	Specification
Receive Frequency	Band1 : 2110 ~ 2170 MHz Band8 : 925~960MHz
Reference Sensitivity Level	Band1 : BER < 0.001 when Îor = -106.7 dBm / 3.84 MHz Band8 : BER < 0.001 when Îor = -103.7 dBm / 3.84 MHz
Maximum Input Level	BER < 0.001 when Îor = -25 dBm / 3.84 MHz
Adjacent Channel Selectivity (ACS)	ACS > 33 dB where BER < 0.001 when Îor = -92.7 dBm / 3.84 MHz & Ioac = –52 dBm / 3.84 MHz @ ±5 MHz
Blocking Characteristic	BER < 0.001 when Îor = -103.7 dBm / 3.84 MHz & Iblocking = -56 dBm / 3.84 MHz @ Fuw(offset) = ±10 MHz or Iblocking = -44 dBm / 3.84 MHz @ Fuw(offset) = ±15 MHz
Spurious Response	BER < 0.001 when Îor = -103.7 dBm / 3.84 MHz & Iblocking = -44 dBm
Intermodulation	BER < 0.001 when Îor= -103.7 dBm / 3.84 MHz & Iouw1 = -46 dBm @ Fuw1(offset) = ±10 MHz & Iouw2 = -46 dBm / 3.84 MHz @ Fuw2(offset) = ±20 MHz
Spurious Emissions	< -57 dBm / 100 kHz BW @ 9 kHz ≤ f < 1 GHz < -47 dBm / 1 MHz BW @ 1 GHz ≤ f ≤ 12.75 GHz
Inner Loop Power Control In Uplink	Adjust output(TPC command) cmd 1dB 2dB 3dB +1 +0.5/1.5 +1/3 +1.5/4 0 -0.5/+0.5 -0.5/+0.5 -0.5/+0.5 -1 -0.5/-1.5 -1/-3 -1.5/-4 group(10equal command group) +1 +8/+12 +16/+24

4) HSDPA transmitter specification

Item	Specification
Transmit Frequency	Band1 : 1920 MHz ~ 1980 MHz Band8 : 880MHz~915 MHz
Maximum Output Power	Sub-Test 1=1/15, 2=12/15 21~25dBm / 3.84 MHz 3=13/15 4=15/8 20~25dBm / 3.84 MHz 5=15/7 6=15/0 19~25dBm / 3.84 MHz

HS-DPCCH

Sub-test in table C.10.1.4	Power step	Power step slot boundary	Power step size, P [dB]	Transmitter power step tolerance [dB]
5	1	Start of Ack/Nack	6	+/- 2.3
	2	Start of CQI	1	+/- 0.6
	3	Middle of CQI	0	+/- 0.6

Spectrum Emission Mask

Sub-Test : 1=1/15, 2=12/15, 3=13/15, 4=15/8, 5=15/7, 6=15/0

Frequency offset from carrier △f	Minimum requirement	Measurement Bandwidth
2.5 ~ 3.5 MHz	-35-15×(△f-2.5)dBc	30 kHz
3.5 ~ 7.5 MHz	-35-1×(△f-3.5)dBc	1 MHz
7.5 ~ 8.5 MHz	-35-10×(△f-7.5)dBc	1 MHz
8.5 ~ 12.5 MHz	-49dBc	1 MHz

Adjacent Channel Leakage Power Ratio (ACLR)	Sub-Test : 1=1/15, 2=12/15, 3=13/15, 4=15/8, 5=15/7, 6=15/0 > 33 dB @ ±5 MHz > 43 dB @ ±10 MHz
Error Vector Magnitude	< 17.5 %, when Pout ≥ -20 dBm

5) HSDPA receiver specification

Item	Specification
Receive Frequency	Band1 : 2110 ~ 2170 MHz Band8 : 925 ~ 960Hz
Maximum Input Level (BLER or R), 16QAM Only	Sub-Test : 1=1/15, 2=12/15, 3=13/15, 4=15/8, 5=15/7, 6=15/0 BLER < 10% or R >= 700kbps

6) WLAN 802.11b transceiver specification

Item	Specification
Transmit Frequency	2400 MHz ~ 2483.5 MHz (CH1~CH13)
Tx Power Level	≤ 20dBm under (Europe), ≤ 30dBm under (USA)
Frequency Tolerance	within ±25 PPM
Chip clock Frequency Tolerance	within ±25 PPM
Spectrum Mask	≤ -30 @ fc-22MHz< f <fc-11MHz and fc+11MHz< f <fc+22MHz ≤ -50 @ f < fc-22MHz and f > fc+22MHz
Power ramp on/off time	≤ 2us
Carrier Suppression	≤ -15dB
Modulation Accuracy (Peak EVM)	≤ 35%
Spurious Emissions	< -36 dBm @ 30MHz ~ 1GHz < -30 dBm above @ 1GHz ~ 12.75GHz < -47 dBm @ 1.8GHz ~ 1.9GHz < -47 dBm @ 5.15GHz ~ 5.3GHz
Rx Min input Sensitivity	≤ -76dBm(1Mbps,2Mbps,5.5Mbps,11Mbps) @ FER ≤ 8%
Rx Max input Sensitivity	≥ -10dBm(1Mbps,2Mbps,5.5Mbps,11Mbps) @ FER ≤ 8%
Rx Adjacent Channel Rejection	≥ 35dB @FER ≤ 8%, interference input signal -70dBm@fc±25MHz(11Mbps)

7) WLAN 802.11g transceiver specification

Item	Specification
Transmit Frequency	2400 MHz ~ 2483.5 MHz (CH1~CH13)
Tx Power Level	≤ 20dBm under (Europe), ≤ 30dBm under (USA)
Frequency Tolerance	within ±25 PPM
Chip clock Frequency Tolerance	within ±25 PPM
Spectrum Mask	≤ -20 @ ±11MHz offset (9Mhz ~ 11MHz) ≤ -28 @ ±20MHz offset (11MHz ~ 20Mhz) ≤ -40 @ ±30MHz offset (20MHz ~ 30Mhz)
Transmitter constellation error (rms EVM)	≤ -5dB
Spurious Emissions	< -36 dBm @ 30MHz ~ 1GHz < -30 dBm above @ 1GHz ~ 12.75GHz < -47 dBm @ 1.8GHz ~ 1.9GHz < -47 dBm @ 5.15GHz ~ 5.3GHz
Rx Min input Sensitivity	PER ≤ 10% -82dBm@6Mbps, -81dBm@9Mbps, -79dBm@12Mbps -77dBm@18Mbps, -74dBm@24Mbps, -70dBm@36Mbps -66dBm@48Mbps, -65dBm@54Mbps
Rx Max input Sensitivity	≥ -20dBm(6,9,12,18,24,36,48,54Mbps) @ PER ≤ 10%
Rx Adjacent Channel Rejection	PER ≤ 10%, ACR ≥ 16dB@6Mbps, ACR ≥ 15dB@9Mbps, ACR ≥ 13dB@12Mbps, ACR ≥ 11dB@18Mbps, ACR ≥ 8dB@24Mbps, ACR ≥ 4dB@36Mbps ACR ≥ 0dB@48Mbps, ACR ≥ -1dB@54Mbps ※ ACR shall be measured by setting the desired signal's strength 3 dB above the rate-dependent sensitivity specified in min input sensitivity

8) GPS receiver specification

Item	Specification
Receive Frequency	1574.42 MHz ~ 1576.42 MHz
Minimum Sensitivity	1 satellite ≥-142dBm, 7 satellites ≥ -147dBm at coarse time aiding

3. TECHNICAL BRIEF

3.1 GENERAL DESCRIPTION

The GT540 supports UMTS-900, UMTS-2100, GSM-850, GSM-850, GSM-900, GSM-1800, and GSM-1900 based GSM/GPRS/EDGE/UMTS. All receivers and the UMTS transmitter use the radioOne1Zero-IF architecture to eliminate intermediate frequencies, directly converting signals between RF and baseband. The quad-band GSM transmitters use a baseband-to-IF upconversion followed by an offset phase-locked loop that translates the GMSK-modulated or 8-PSK-modulated signal to RF.

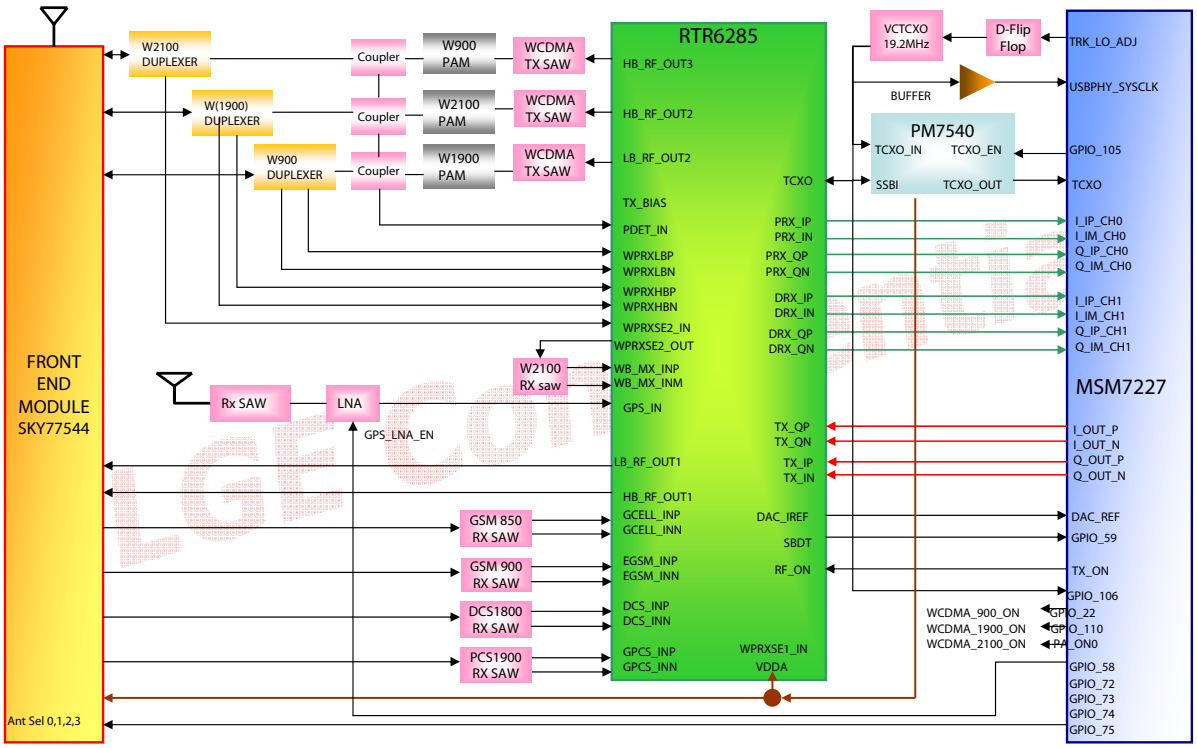

[Figure 1-1] Block diagram of RF part

3. TECHNICAL BRIEF

A generic, high-level functional block diagram of GT540 is shown in Figure 1-1. One antenna collects base station forward link signals and radiates handset reverse link signals. The antenna connects with receive and transmit paths through a ASM(Antenna-Switch-Module).

The UMTS receive paths each include an LNA, an RF band-pass filter, and a downconverter that translate the signal directly from RF-to-baseband using radioOne ZIF techniques. The RFIC's Rx analog baseband outputs, for the receive chains, connect to the MSM IC. The UMTS and GSM Rx baseband outputs share the same inputs to the MSM IC.

For the transmit chains, the RTR6285 IC directly translates the Tx baseband signals (from the MSM device) to an RF signal using an internal LO generated by integrated onchip PLL and VCO. The RTR6285 IC outputs deliver fairly high-level RF signals that are first filtered by Tx SAWs and then amplified by their respective UMTS PAs. In the GSM receive path, the received RF signals are applied through their band-pass filters and down-converted directly to baseband in the RTR6285 transceiver IC. These baseband outputs are shared with the UMTS receiver and routed to the MSM IC for

further signal processing.

The GSM/EDGE transmit path employs one stage of up-conversion and, in order to improve efficiency, is divided into phase and amplitude components to produce an open-loop Polar topology:

1. The on-chip quadrature up-converter translates the GMSK-modulated signal or 8-PSK modulated signal, to a constant envelope phase signal at RF;
2. The amplitude-modulated (AM) component is applied to the ramping control pin of Polar power amplifier from a DAC within the MSM GT540 power supply voltages are managed and regulated by the PM7540 Power Management IC. This versatile device integrates all wireless handset power management, general housekeeping, and user interface support functions into a single mixed signal IC.

It monitors and controls the external power source and coordinates battery recharging while maintaining the handset supply voltages using low dropout, programmable regulators.

The device's general housekeeping functions include an ADC and analog multiplexer circuit for monitoring on-chip voltage sources, charging status, and current flow, as well as user-defined off-chip variables such as temperature, RF output power, and battery ID.

Various oscillator, clock, and counter circuits support IC and higher-level handset functions. Key parameters such as under-voltage lockout and crystal oscillator signal presence are monitored to protect against detrimental conditions.

3.2 GSM MODE

3.2.1 GSM RECEIVER

The GSM-850, GSM-900, GSM-1800, and GSM-1900 receiver inputs of RTR6285 are connected directly to the transceiver front-end Module. GSM-850, GSM-900, GSM-1800, and GSM-1900 receiver inputs use differential configurations to improve common-mode rejection and second-order non-linearity performance. For example Figure 1-2 shows receiver input topologies for DCS and PCS (GSM-850/900 have the same receiver input topologies). The balance between the complementary signals is critical and must be maintained from the RF filter outputs all the way into the IC pins.

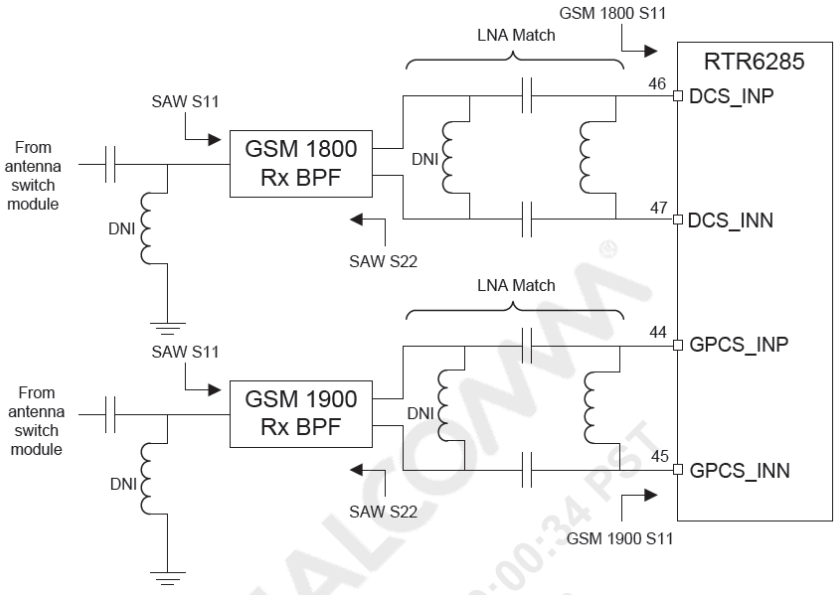

[Figure 1-2] DCS and PCS Receiver Inputs Topologies

Since GSM-850, GSM-900, GSM-1800, and GSM-1900 signals are time-division duplex (the handset can only receive or transmit at one time), switches are used to separate Rx and Tx signals in place of frequency duplexers – this is accomplished in the switch module. The GSM-850, GSM-900, GSM-1800, and GSM-1900 receive signals are routed to the RTR6285 through band selection filters and matching networks that transform single-ended 50-Ω sources to differential impedances optimized for gain and noise figure. The RTR input uses a differential configuration to improve second-order intermodulation and common mode rejection performance. The RTR6285 input stages include MSM-controlled gain adjustments that maximize receiver dynamic range.

The amplifier outputs drive the RF ports of the quadrature RF-to-baseband downconverters. The downconverted baseband outputs are multiplexed and routed to lowpass filters (one I and one Q) having passband and stopband characteristics suitable for GMSK or 8-PSK processing. These filter circuits include DC offset corrections. The filter outputs are buffered and passed on to the MSM7227 IC for further processing asshown in Figure 1-4.

3.2.2 GSM TRANSMITTER

The RTR6285 transmitter outputs(HB_RF_OUT1 and LB_RF_OUT1) include on-chip output matching inductors. 50ohm output impedance is achieved by adding a series capacitor at the output pins. The capacitor value may be optimized for specific applications and PCB characteristics based on pass-band symmetry about the band center frequency as shown in Figure 1-3.

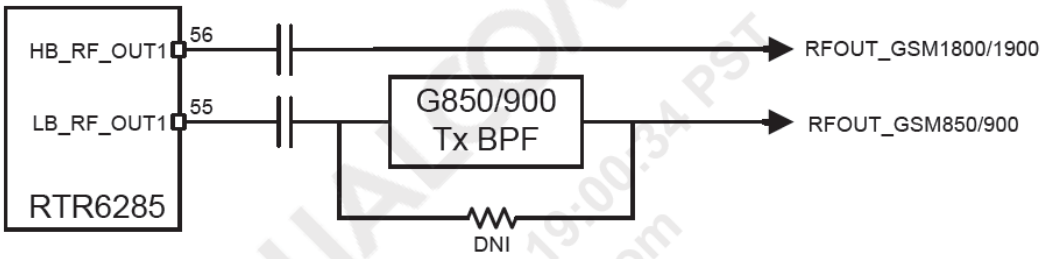

[Figure 1-3] GSM Transmitter Outputs Topologies

The RTR6285 IC is able to support GSM 850/900 and GSM 1800/1900 mode transmitting. This design guideline shows a tri-band GSM application. Both high-band and low band outputs are followed by resistive pads to ensure that the load presented to the outputs remains close to 50ohm.

3.3 UMTS MODE

3.3.1 UMTS RECEIVER

The UMTS duplexer receiver output is routed to LNA circuits within the RTR6285 device as shown in Figure 1-4. The UMTS Rx input is provided with an on-chip LNA that amplifies the signal before a second stage filter that provides differential downconverter as shown in Figure 1-5. This second stage input is configured differentially to optimize secondorder intermodulation and common mode rejection performance. The gain of the UMTS frontend amplifier and the UMTS second stage differential amplifier are adjustable, under MSM control, to extend the dynamic range of the receivers. The second stage UMTS Rx amplifiers drive the RF ports of the quadrature RF-to-baseband downconverters. The downconverted UMTS Rx baseband outputs are routed to lowpass filters having passband and stopband characteristics suitable for UMTS Rx processing. These filter circuits allow DC offset corrections, and their differential outputs are buffered to interface shared with GSM Rx to the MSM IC. The UMTS baseband outputs are turned off when the RTR6285 is downconverting GSM signals and on when the UMTS is operating.

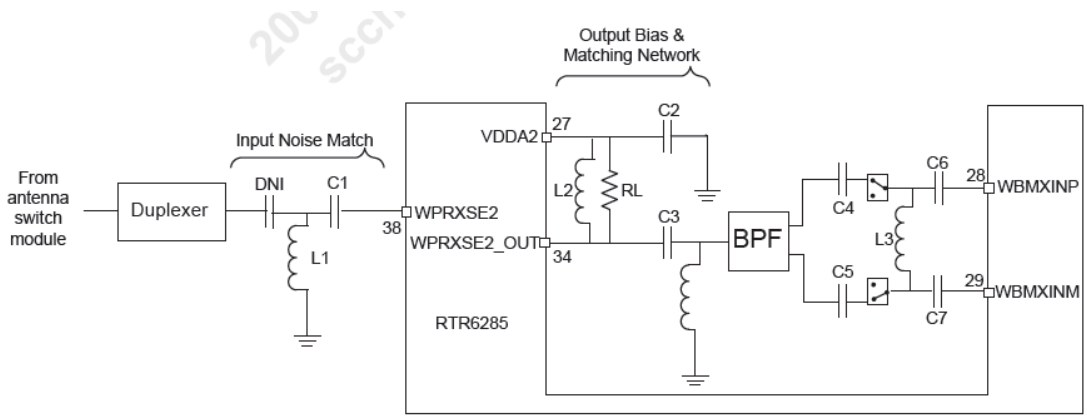

[Figure 1-4] UMTS Receiver Inputs Topologies

3.3.2 UMTS TRANSMITTER

The UMTS Tx path begins with differential baseband signals (I and Q) from the MSM device. These analog input signals are amplified, filtered, and applied to the quadrature up-converter mixers. The up-converter output is amplified by multiple variable gain stages that provide transmit AGC control. The AGC output is filtered and applied to the driver amplifier; this output stage includes an integrated matching inductor that simplifies the external matching network to a single series capacitor to achieve the desired 50-Ω interface.

The RTR6285 UMTS output is routed to its power amplifier through a bandpass filter, and delivers fairly high-level signals that are filtered and applied to the PA. Transmit power is delivered from the duplexer to the antenna through the switch module. The transceiver LO synthesizer is contained within the RTR6285 IC with the exception of the off-chip loop filter components and the VC-TCXO. This provides a simplified design for multimode applications. The PLL circuits include a reference divider, phase detector, charge pump, feedback divider, and digital logic generator.

UMTS Tx. Using only PLL1, the LO generation and distribution circuits create the necessary LO signals for nine different frequency converters. The UMTS transmitter also employs the ZIF architecture to translate the signal directly from baseband to RF. This requires FLO to equal FRF, and the RTR6285 IC design achieves this without allowing FVCO to equal FRF. The RTR6285 IC is able to support UMTS 2100/1900/1800/1700 and 850 mode transmitting. This design guideline shows only UMTS 2100 applications.

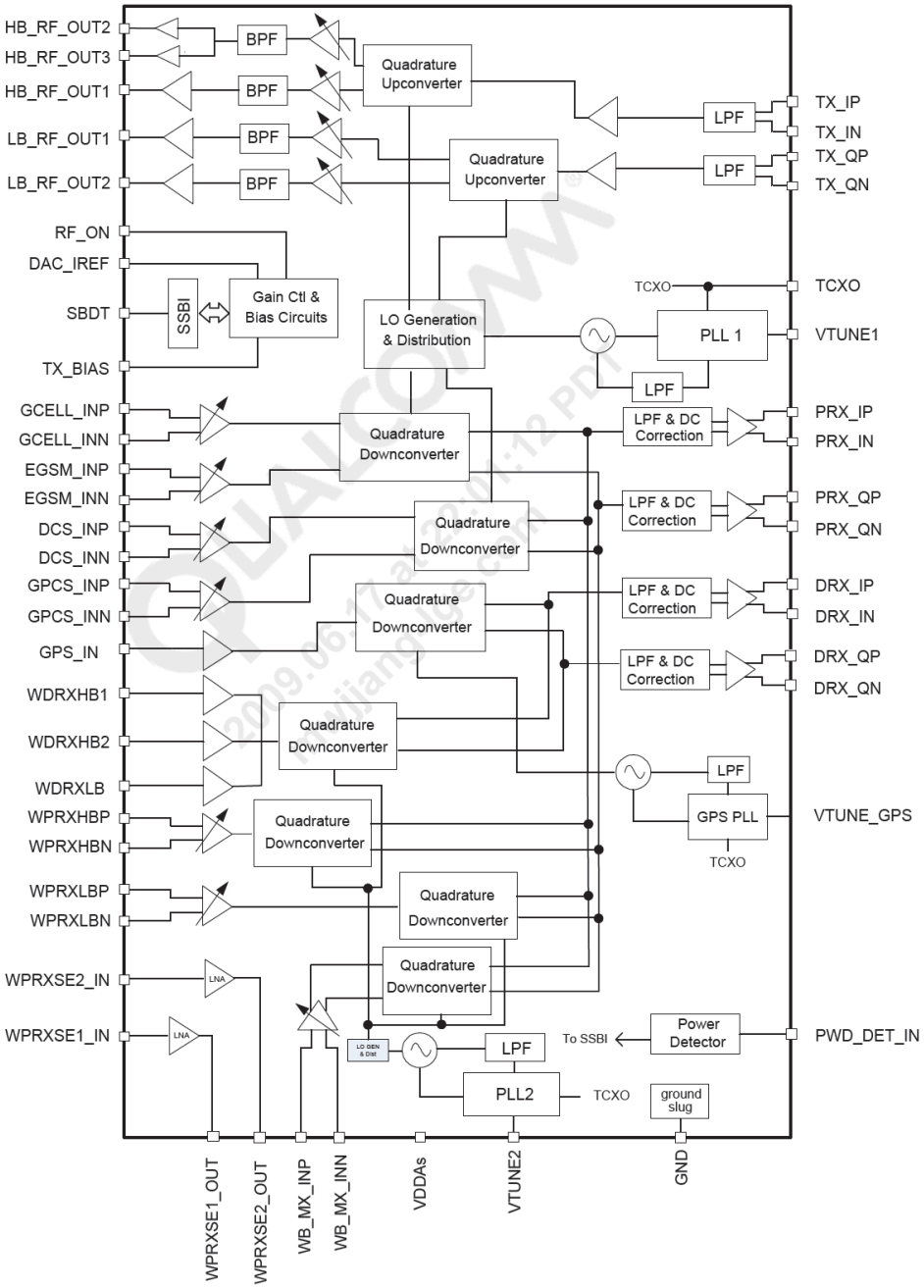

[Figure 1.5] RTR6285 IC Functional Block Diagram

3.4 GPS RECEIVER

The GPS receiver input employs a single-ended connection realized by this pin. The GPS input is routed from the GPS antenna switch, through a band pass filter and then an impedance transformer circuit that optimally matches the impedance looking into the GPS LNA. The impedance transformer circuit topology is shown in Figure 1-6.

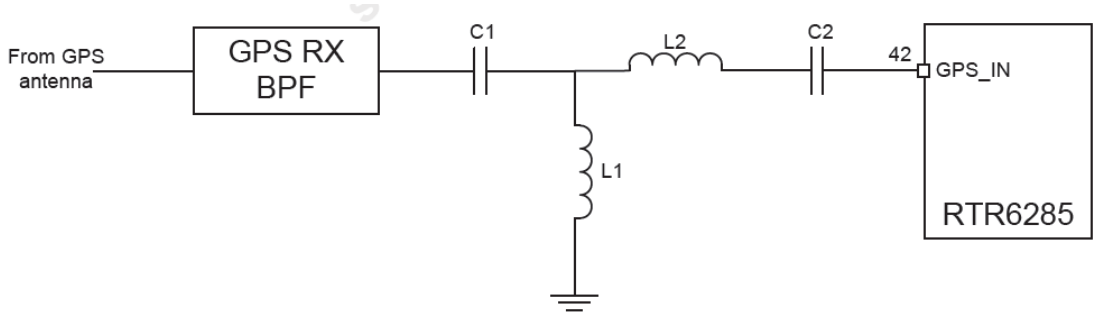

[Figure 1.6] GPS Input Network Topology

3.5 LO GENERATION and DISTRIBUTION CIRCUIT

The integrated LO generation and distribution circuits are driven by internal VCOs to support various modes to yield highly flexible quadrature LO outputs that drive all GSM/EDGE, UMTS band and GPS up-converters and down-converters; with the help of these LO generation and distribution circuits, true zero-IF architecture is employed in all GSM and UMTS band receivers and transmitters to translate the signal directly from RFto-baseband and from baseband-to-RF. Two fully functional fraction-N synthesizers, including VCOs and loop filters, are integrated within the RTR6285 IC. In addition, the RTR6285 has a third synthesizer used for GPS operation. The first synthesizer (PLL1) in the RTR6285 creates the transceiver Los that support the UMTS transmitter, and all four GSM band receivers and transmitters including: GSM850, GSM900, GSM1800, and GSM1900. The second synthesizer (PLL2) in the RTR6285 IC provides the LO for the UMTS primary receiver. For the RTR6285 IC only, the second synthesizer also provides the LO for the secondary UMTS receiver. The third synthesizer (PLL3), only in the RTR6285 IC, provides the LO for the GPS receiver. An external TCXO input signal is required to provide the synthesizer frequency reference to which the PLL is phase and frequency locked. The RTR6285 ICs integrate most of the PLL loop filter components on-chip except for three off-chip loop filter-series capacitors, which significantly reduces off-chip component requirement. With the integrated fractional-N PLL synthesizers, the RTR6285 ICs have the advantage of more flexible loop bandwidth control, fast lock time, and low-integrated phase error.

3.6 OFF-CHIP RF COMPONENTS

3.6.1. UMTS PAM

3.6.1.1 W2100 (U105, ACPM-5201)

The ACPM-5201 is a fully matched 10-pin surface mount module developed for UMTS Band1. This power amplifier module operates in the 1920-1980MHz bandwidth. The ACPM-5201 meets stringent UMTS linearity requirements up to 27.5dBm output power. The 3mmx3mm form factor package is self contained, incorporating 50ohm input and output matching networks

The ACPM-5201 features 5th generation of CoolPAM circuit technology which supports 3 power modes – bypass, mid and high power modes. The CoolPAM is stage bypass technology enhancing PAE (power added efficiency) at low and medium power range. Active bypass feature is added to 5th generation to enhance PAE further at low output range. This helps to extend talk time. A directional coupler is integrated into the module and both coupling and isolation ports are available externally, supporting daisy chain.

The power amplifier is manufactured on an advanced InGaP HBT (hetero-junction Bipolar Transistor) MMIC microwave monolithic integrated circuit) technology offering state-of-the-art reliability, temperature stability and ruggedness

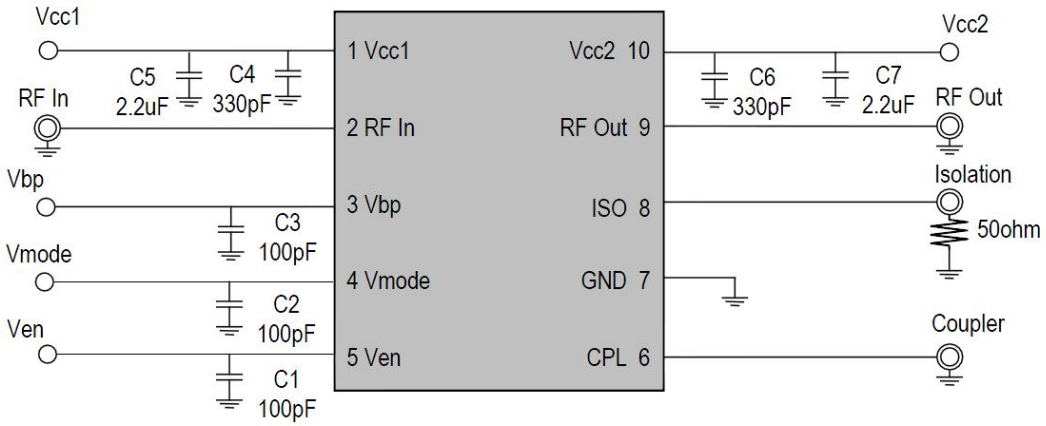

[Figure 1.7] ACPM-5201 (W2100)

3.6.1.2 W900 (U104, ACPM-5308)

This power amplifier module operates in the 880-915MHz bandwidth. The ACPM-5308 meets stringent UMTS linearity requirements up to 28dBm output power.

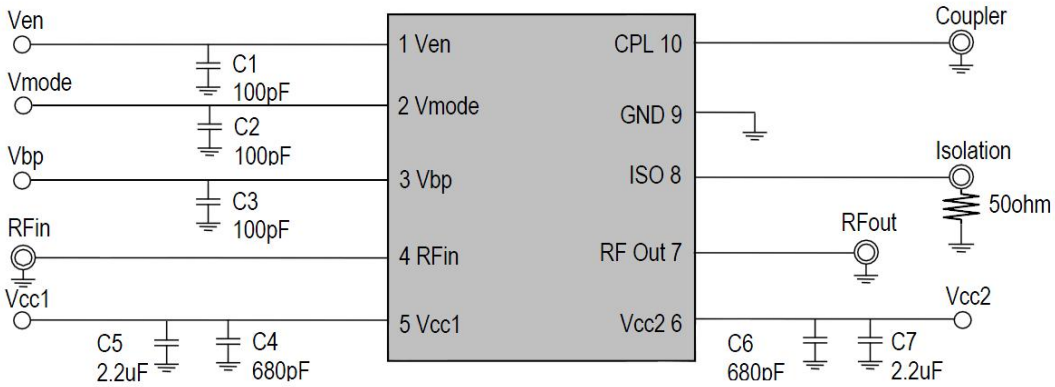

[Figure 1.8] ACPM-5308 (W900)

3.6.2 19.2MHz VCTCXO (X250, KT3225L19200DCW28RA0)

The Voltage Controlled Temperature Compensated Crystal Oscillator (VCTCXO) provides the reference frequency for all RFIC synthesizers as well as clock generation functions within the MSM6285 IC. The oscillator frequency is controlled by the MSM6285 ICs.

TRK_LO_ADJ pulse density modulated signal in the same manner as the transmit gain control TX_AGC_ADJ. A two-pole RC lowpass filter is recommended on this control line.

The PM7540 IC controls the handset power-up sequence, including a special VCTCXO warm-up interval before other circuits are turned on. This warm-up interval (as well as other TCXO controller functions) is enabled by the MSM TCXO_EN line . The PM7540 IC VREG_TCXO regulated output voltage is used to power the VCTCXO and is enabled before most other regulated outputs. Any GSM mode power control circuits within the MSM7227 IC require a reference voltage for proper operation and sufficient accuracy. Connecting the PM7540 IC REF_OUT directly to the MSM7227 IC GSM_PA_PWR_CTL_REF provides this reference. This sensitive analog signal needs a 0.1 µF low frequency filter near to MSM side, and isolate from digital logic and clock traces with ground on both sides, plus ground above and below if routed on internal layers.

ELECTRICAL CHARACTERISTICS
(Ta=25+/-2deg.C, Vcc=2.8V+/-5%)

ITEMS	MIN.	TYP.	MAX.	UNIT	CONDITIONS	REMARKS
Nominal Frequency	---	19.200000	---	MHz	Vcc=2.8V+/-5%, Vcon=0.4 to 2.4V 2	
Output Voltage(Peak to Peak)	0.8	---	---	V	Load:40pF/5kohm	Ta=-30 to +85deg.C, DC Bias
Power Supply Current 1	---	---	1.6	mA		
Frequency Tolerance	-1.5	---	+1.5	ppm	Preset Frequency and after 2times reflow soldering	Ta=25+/-2deg.C, Vcon=1.4V
Frequency Stability CTQ	-2.0	---	+2.0	ppm	Ta=-30 to +85deg.C	ref.:Ta=25deg.C,
	-0.2	---	+0.2	ppm	Load:40pF+/-10%, 5kohm+/-10%	
	-0.2	---	+0.2	ppm	Voltage 2.8V+/-5%	
Frequency Stability Slope	-0.15	---	+0.15	ppm/deg.C	Ta=-10 to +60deg.C	
	-0.3	---	+0.3	ppm/deg.C	Ta=-30 to -10deg.C, +60 to +85deg.C	
Frequency Aging Rate	-0.7	---	+0.7	ppm/Y	Ta=25+/-2deg.C	One Year
Voltage Control Range	-12.0	---	-7.8	ppm	Vcon=0.4V	ref.:Vcon=1.4V
	7.8	---	12.0	ppm	Vcon=2.4V	
Start up Time	---	---	3.0	msec	90%*Vp-p	Ta=-30 to +85deg.C
	---	---	3.0		Within +/-0.5ppm	
Duty Cycle	40	---	60	%		
Harmonics	---	---	-5.0	dBc		Ta=-30 to +85deg.C
SSB Carrier Noise	---	---	-86	dBc/Hz	@10Hz offset	Ta=25+/-2deg.C
	---	---	-110	dBc/Hz	@100Hz offset	
	---	---	-130	dBc/Hz	@1kHz offset	
	---	---	-144	dBc/Hz	@10kHz offset	
	---	---	-144	dBc/Hz	@100kHz offset	

3.6.3 ASM + GSM PAM (U100, SKY77544)

SKY77544 is a transmit and receive Front End Module (FEM) designed in a very low profile (0.9 mm), compact form factor for quad-band cellular handsets comprising GSM850/900, DCS1800, and PCS1900 operation — a complete transmit VCO-to-Antenna and Antenna-toreceive SAW filter solution. The FEM also supports Class 12 General Packet Radio Service (GPRS) multi-slot operation and EDGE Polar Modulation. WCDMA switch-through support is provided by three dedicated high-linearity ports.

The module consists of a GSM850/900 PA and DCS1800/PCS1900 PA block, impedancematching circuitry for 50 Ω input and output impedances, Tx harmonic filtering, high linearitylow insertion loss switches, and a CMOS Power Amplifier Control (PAC) block. A custom silicon integrated circuit contains decoder circuitry to control the RF switch while providing a low current external control interface. An integrated temperature sensor provides an analog voltage based on the temperature of the module.

Fabricated in InGaP/GaAs, the Heterojunction Bipolar Transistor (HBT) PA blocks support the GSM850/900 bands and DCS1800/PCS1900 bands. Both PA blocks share common power supply pads to distribute current. The output of the PA block and the outputs to the seven receive pads connect to the antenna pad through a highly linear antenna switch. The WCDMA and Rx ports feature a 0 volts DC offset level, which eliminates any need for external blocking capacitors. The InGaP/GaAs die, switch die, Silicon (Si) controller die, and passive components are mounted on a multi-layer laminate substrate and the entire assembly is encapsulated with plastic overmold.

RF input and output ports of the SKY77544 are internally matched to a 50 Ω load to reduce the number of external components for a quad-band design. Extremely low leakage current of the FEM maximizes handset standby time. Band selection and control of transmit and receive RF signal flows are performed by use of four external control pads. See Figure 1.9 shown on overleaf. Mode of operation Tx, Rx, Band (GSM850, GSM900, DCS, PCS, and UMTS) is controlled with 4 logic inputs: BS1, BS2, Mode, and TxEN. Proper timing of the TxEN input and the VAPC input ensures high isolation between the antenna and Tx-VCO while the VCO is being tuned prior to the transmit burst. The Enable input controls the initial turn-on of the PAC circuitry to minimize battery drain.

The integrated power amplifier control (PAC) function provides envelope amplitude control by reducing sensitivity to input drive, temperature, power supply, and process variation.

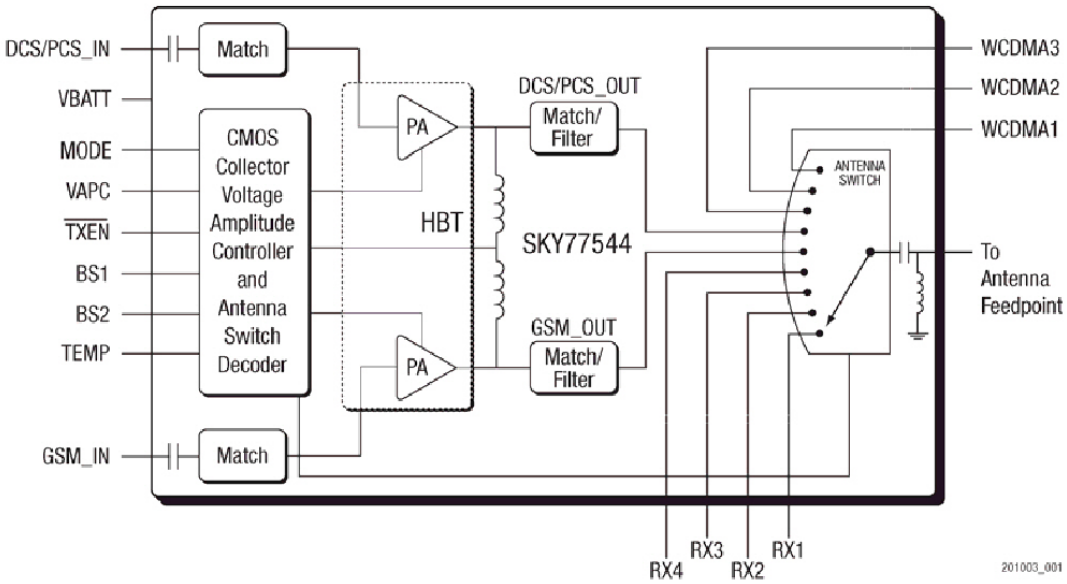

[Figure 1.9] SKY77544 Block Diagram

Mode	Input Control Bits			
	$\overline{\text{TxEN}}$	MODE	BS1	BS2
Standby	0	0	0	0
Tx_LOW BAND	0	0	0	1
Tx_HIGH BAND	0	0	1	1
TBD	0	1	0	1
TBD	0	1	1	1
Rx1	1	X	0	0
Rx2	1	X	0	1
Rx3	1	X	1	1
Rx4	1	X	1	0
WCDMA1	0	0	1	0
WCDMA2	0	1	0	0
WCDMA3	0	1	1	0

[Figure 1.10] SKY77544 Control Logic

3.6.4 GPS LNA (U102, RF2815)

The RF2815 is a GPS Low Noise Amplifier with an integrated SAW filter at the output. Low noise figure, along with high gain, achieved by the RF2815 makes it ideal for GPS recievers requiring high sensitivity. This module builds upon RFMD's leading edge pHEMT process and integrates input matching and low loss high rejection SAW filter at the output. This results in high performance and a reduced solution size. The ease of implementation simplifies the reciever design.

The RF2185 is packaged in a compact 3.3 mm x 2.1 mm x 1.0 mm package with low external component count required to achieve the best-in-class performance.

3.7 Digital Baseband(DBB/MSM7227)

3.7.1 General Description

A. Features(MSM7227)

The basic MSM7227 system solution consists of the MSM7227, RTR6285™, and PM7540™ ICs, plus AMSS™ system software with the SURF7227™ platform available for development. General features include:

- WCDMA Rel '99 plus HSDPA and HSUPA
- GSM/GPRS/EDGE
- High-performance ARM1136JF-S™ application processor at up to 600 MHz; QDSP5000™ at 320 MHz
- High-performance ARM926EJ-S™ modem processor at up to 400 MHz; QDSP4000™ at 122.88 MHz
- Java® hardware acceleration for faster Java-based games and other applets
- Support for Bluetooth® 2.1 EDR via an external Bluetooth System-on-Chip (SoC)
- High-speed, serial mobile display digital interface (MDDI) that optimizes the interconnection cost between the MSM device and the LCD panel
- Receive diversity support for WCDMA mode, thereby providing improved capacity and data throughput
- USB 2.0 compliant high-speed USB core with limited OTG capabilities
- Integrated high-speed USB PHY
- Integrated wideband stereo codec for digital audio applications
- Direct interface to digital camera module with video front-end (VFE) image processing
- GPS position location capabilities
- Vocoder support (GSM-HR, FR, EFR, AMR, and AMR-WB/+)
- Advanced 12 × 12 ×1.05 mm, 0.4 mm pitch, 560 NSP

3.8 Hardware Architecture

<System HW Block>

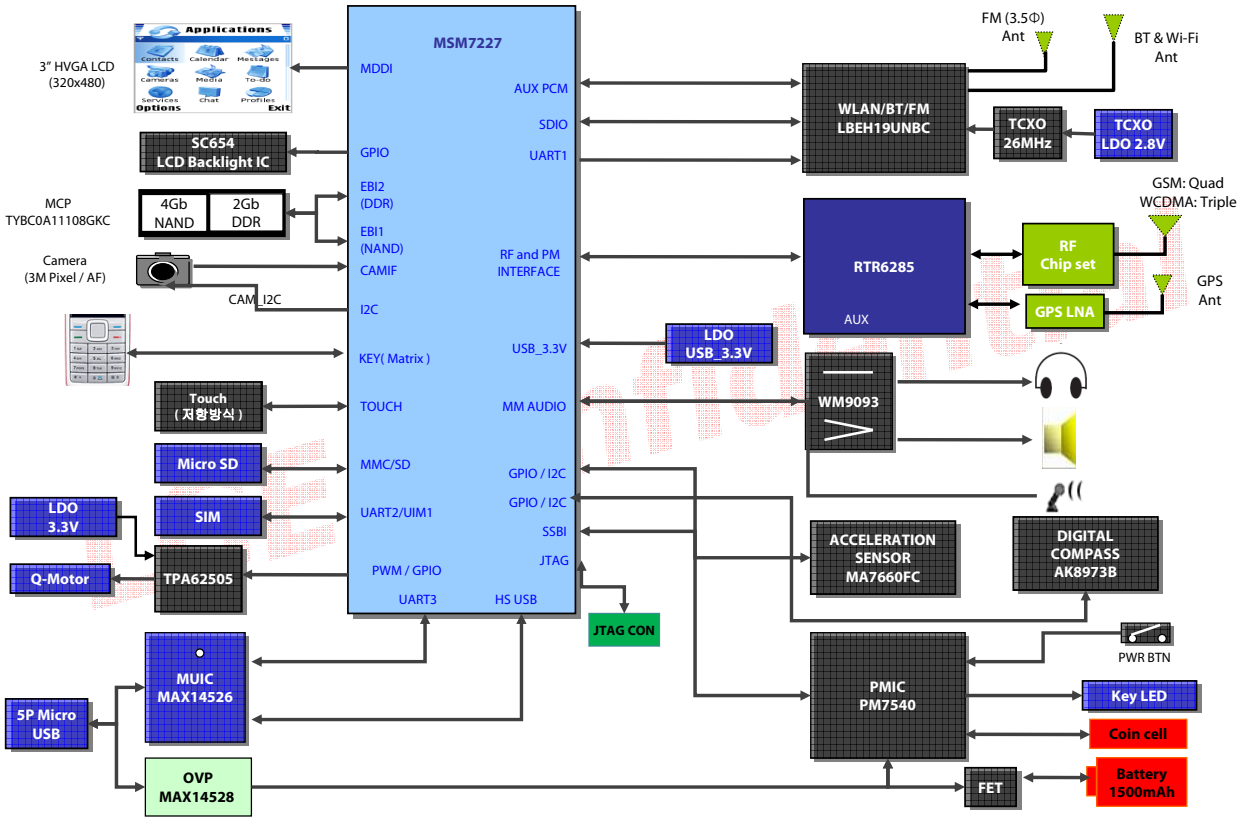

Figure. Simplified Block Diagram

<Power Block>

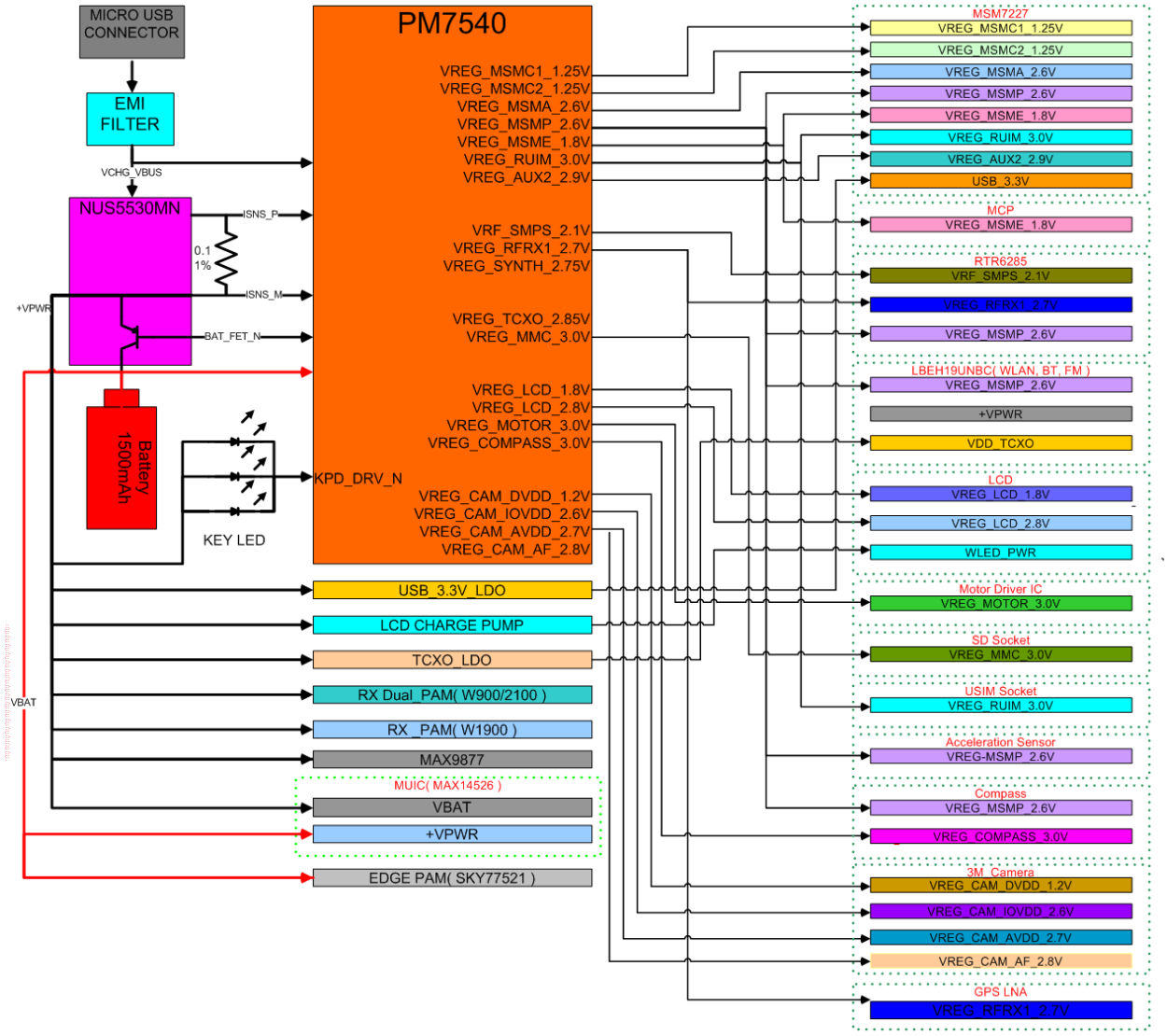

Figure. Simplified Block Diagram

<LCD Camera Interface >

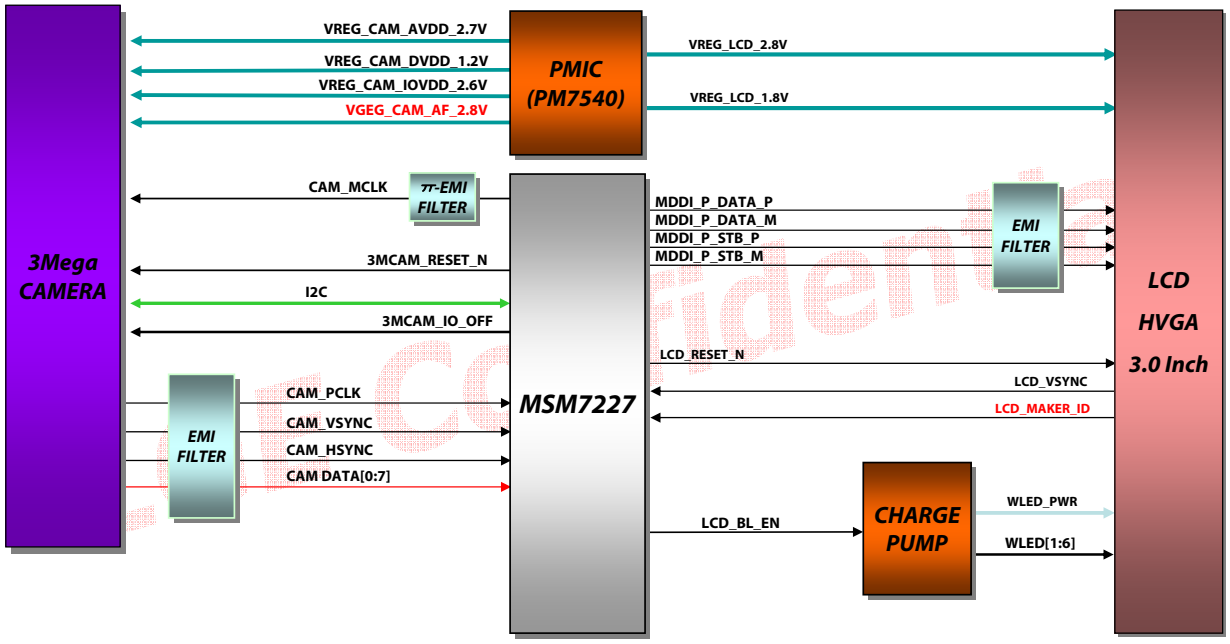

Figure. Simplified Block Diagram

<External Memory & USIM >

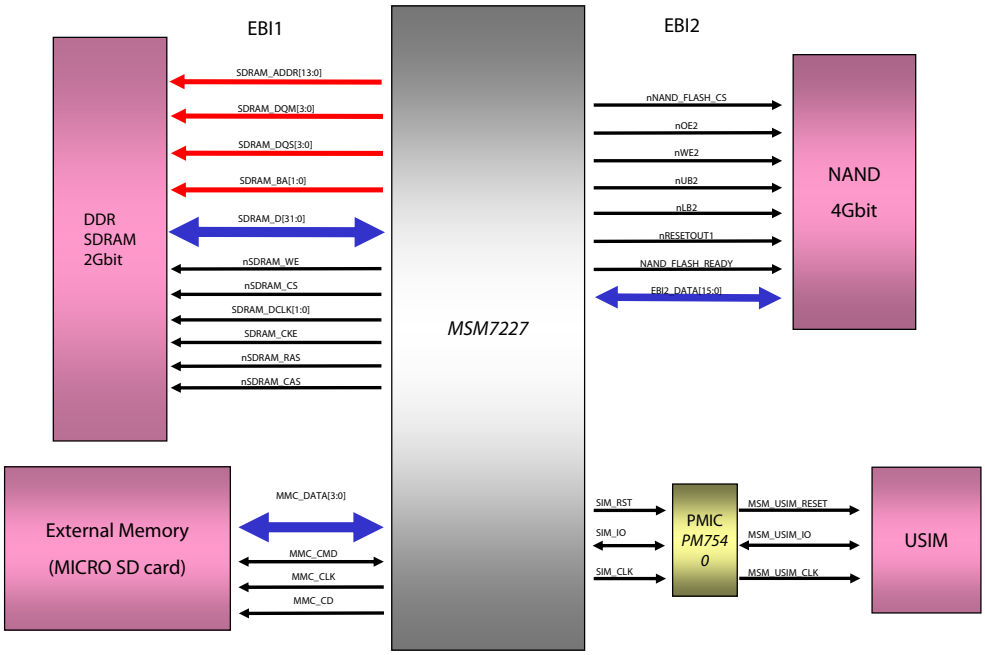

<SENSOR & MOTOR >

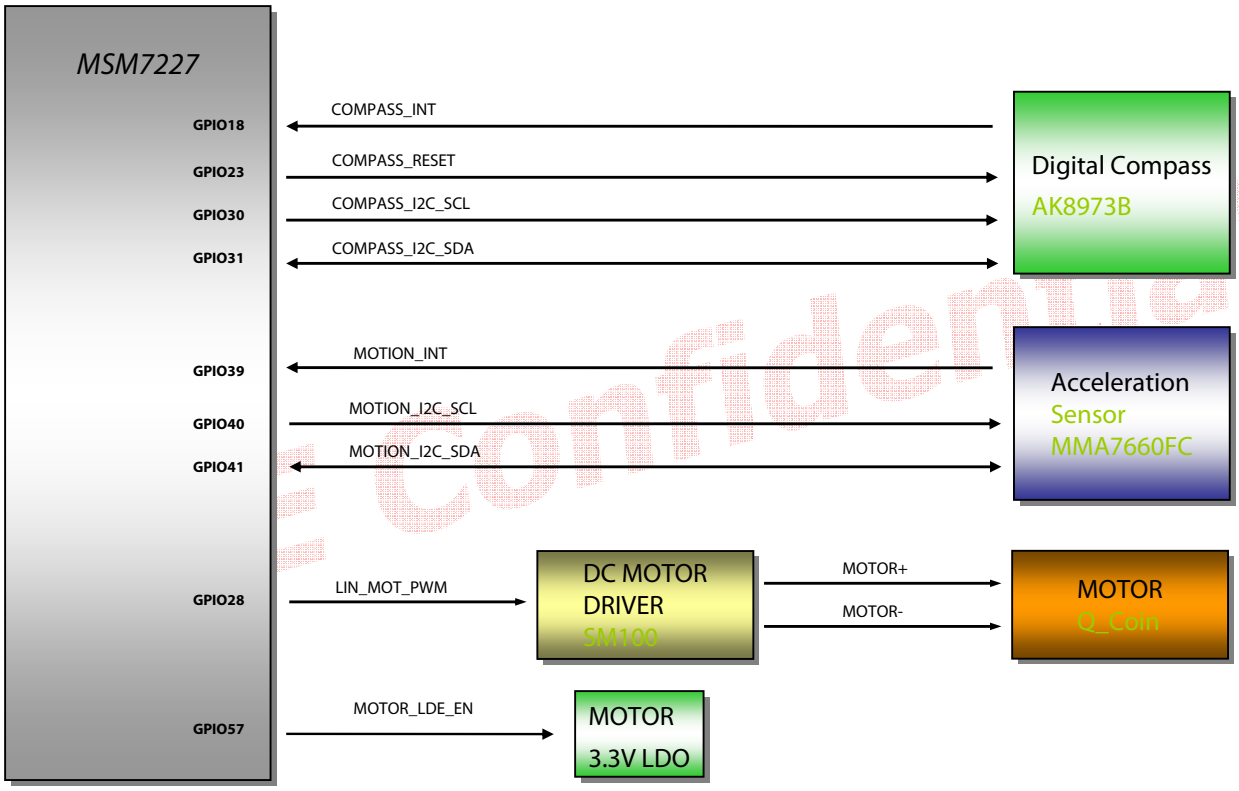

3.9 Subsystem (MSM7227)

3.9.1. ARM Microprocessor Subsystem

The MSM7227 device uses an embedded ARM1136JF-S, ARM926EJ-S microprocessor. This microprocessor, through the system software, controls most of the functionality for the MSM, including control of the external peripherals such as the keypad, LCD, SDRAM, and NANDFlash devices. Through a QUALCOMM proprietary single-wire SBI (SSBI) the ARM926EJ-S configures and controls the functionality of the RTR6285 and PM7540 devices.

3.9.2. WCDMA Subsystem

The WCDMA subsystem performs the data conversions and signal processing necessary to maintain the WCDMA air interface between the handset and the base station (and also the WCDMA network). The subsystem components include:

- Searcher engine
- Demodulating fingers
- Combining block
- Frame deinterleaver
- Viterbi decoder
- Reverse link subsystem
- Turbo decoder

On the forward link traffic channel, the WCDMA subsystem searches, demodulates, and decodes incoming pilot, sync, paging, and traffic channel information. It extracts low bit-rate packet data from the forward link traffic channel and sends the packet data to the vocoder for processing. On the reverse link, the WCDMA subsystem processes the packet data from the vocoder and modulates the reverse traffic channel.

3.9.3. GSM Subsystem

The GSM subsystem performs the data conversions and signal processing necessary to maintain the GSM air interface, including PA gain control for GPRS support. For GSM, the power profile ramps up before the burst and ramps down afterward. For GPRS, transmit bursts can occur in as many as four sequential slots and the PA must be ramped up and down smoothly between each slot, holding the desired output power level during each burst. GSM support includes:

- GSM release '99 (circuit switching)
- GPRS (packet switching)
- EDGE E2 power class for 8 PSK

3.9.4. RF Interface

The RF interface communicates with the mobile station's external RF and analog baseband circuits. Signals to these circuits control signal gain in the Rx and Tx signal path and maintain The system's frequency reference.

3.9.5. Single-wire serial bus interface (SSBI)

The MSM7227 device's SSBI is designed specifically to be a quick, low pin count control protocol for QUALCOMM's RTR6285 and PM7540 ASICs. Using the SSBI, the RTR6285 and PM7540 devices can be configured for different operating modes and for minimum power consumption, extending battery life in Standby mode. The SBI also controls DC baseband offset errors.

3.9.6. Audio function

MSM7227 audio functions include the analog Rx and Tx paths (or stereo wideband codec), audio digital signal processing (DSP) that provides adjustable gains and filtering, PCM circuits for interfacing with external devices, and additional audio DSP that actually implements encoding and decoding. Other key features include:

- The wideband codec supports stereo music/ringer melody applications in addition to the 8 kHz voice band applications on the forward link.
- A PCM interface allows an external codec to be used instead of the internal codec; this supports inter-IC Sound (I2S) modes that allow an external stereo DAC or SADC to be used.
- Currently in AMSS baseline only I2S output mode is supported (SDAC-only, no SADC support).
- Audio decoder summing and headset switch detection are included.
- Audio DSP includes the Rx and Tx filters needed to meet ITU-T G.712 requirements.
- A programmable sidetone path provides for summing part of the Tx audio into the Rx path.
- Many codec parameters are configurable via SBI registers.
- The audio processing is configured through QDSP5 command types and is not directly controlled by the microprocessor.

3.9.7. Vocoder Subsystem

The MSM7227 device's QDSP4000 supports AMR,FR,EFR and HR. In addition, the QDSP4000 has modules to support the following audio functions: DTMF tone generation, DTMF tone detection, Tx/Rx volume controls, Tx/Rx automatic gain control (AGC), Rx Automatic Volume Control (AVC), EarSeal Echo Canceller (ESEC), Acoustic Echo Canceller (AEC), Noise Suppression (NS), and programmable, 13-tap, Type-I, FIR, Tx/Rx compensation filters. The MSM7227 device's integrated ARM9TDMI processor downloads the firmware into the QDSP4000 and configures QDSP4000 to support the desired functionality.

3.9.8. Mode Select and JTAG Interfaces

The mode pins to the MSM7227 device determine the overall operating mode of the ASIC. The options under the control of the mode inputs are Native mode, which is the normal subscriber unit operation, ETM mode, which enables the built-in trace mode, and test mode for factory testing. The MSM7227 device meets the intent of the ANSI/IEEE 1149.1A-1993 feature list. The JTAG interface can be used to test digital interconnects between devices within the mobile station during manufacture.

3.9.9. General-Purpose Input/Output Interface

The MSM7227 IC includes 133 general purpose input/output (GPIO) pins, and each can be configured as a digital input or digital output. Inputs can be set to have a pull-up, pull-down, keeper, or no-pull. Output drive strength is also programmable. Software assigns functions to the GPIOs and their configurations are set accordingly. Some of the GPIO pins have alternate functions supported on them. The alternate functions include USB interface, additional RAM, ROM, general-purpose chip selects, parallel LCD interface, and a UART interface. The function of these pins is documented in the various software releases.

3.9.10. UART

The MSM7227 device employs three UARTs. UART1 has dedicated pins while UART2 and UART3 share multiplexed pins.

- UART1 for Bluetooth
- UART2 for USIM interface
- UART3 for data

.

3.9.11. USB

The MSM7227 IC supports one High Speed USB (HS-USB) USBH port with built-in PHY and one Full Speed USB-UICC port. The MSM7227 IC supports USB interfaces using two controllers:

- The primary controller is the HS-USB port with an integrated physical layer (PHY). This HS-USB port is also capable of supporting USB operations at low-speed and full-speed.
- The secondary controller is the FS USB-UICC port, which only supports host mode functionality.

3.10 Power Block

3.10.1. General

MSM7227, included RF, is fully covered by PM7540 (Qualcomm PMIC). PM7540 cover the power of MSM7227, MSM memory, RF block, Bluetooth, USIM and TCXO.

Major power components are :

PM7540 (U403) : Phone main PMIC

RT9393GQW (U601) : LCD BLT Charge Pump

NUS5530 (Q400) : main power path switch(battery charging circuit)

MAX14528 (U402) : OVP(Over voltage protection) IC

3.10.2 PM7540

The PM7540 device (Figure) integrates all wireless handset power management. The power management portion accepts power from all the most common sources – battery, external charger, adapter, coin cell back-up – and generates all the regulated voltages needed to power the appropriate handset electronics. It monitors and controls the power sources, detecting which sources are applied, verifying that they are within acceptable operational limits, and coordinates battery and coin cell recharging while maintaining the handset electronics supply voltages. Eight programmable output voltages are generated using low dropout voltage regulators, all derived from a common trimmed voltage reference. A dedicated controller manages the TCXO warm-up and signal buffering, and key parameters (under-voltage lockout and crystal oscillator signal presence) are monitored to protect against detrimental conditions. MSM device controls and statuses the PM7540 IC using Single-wire SBI(SSBI) supplemented by an Interrupt Manager for time-critical information. Another dedicated IC Interface circuit monitors multiple trigger events and controls the power-on sequence.

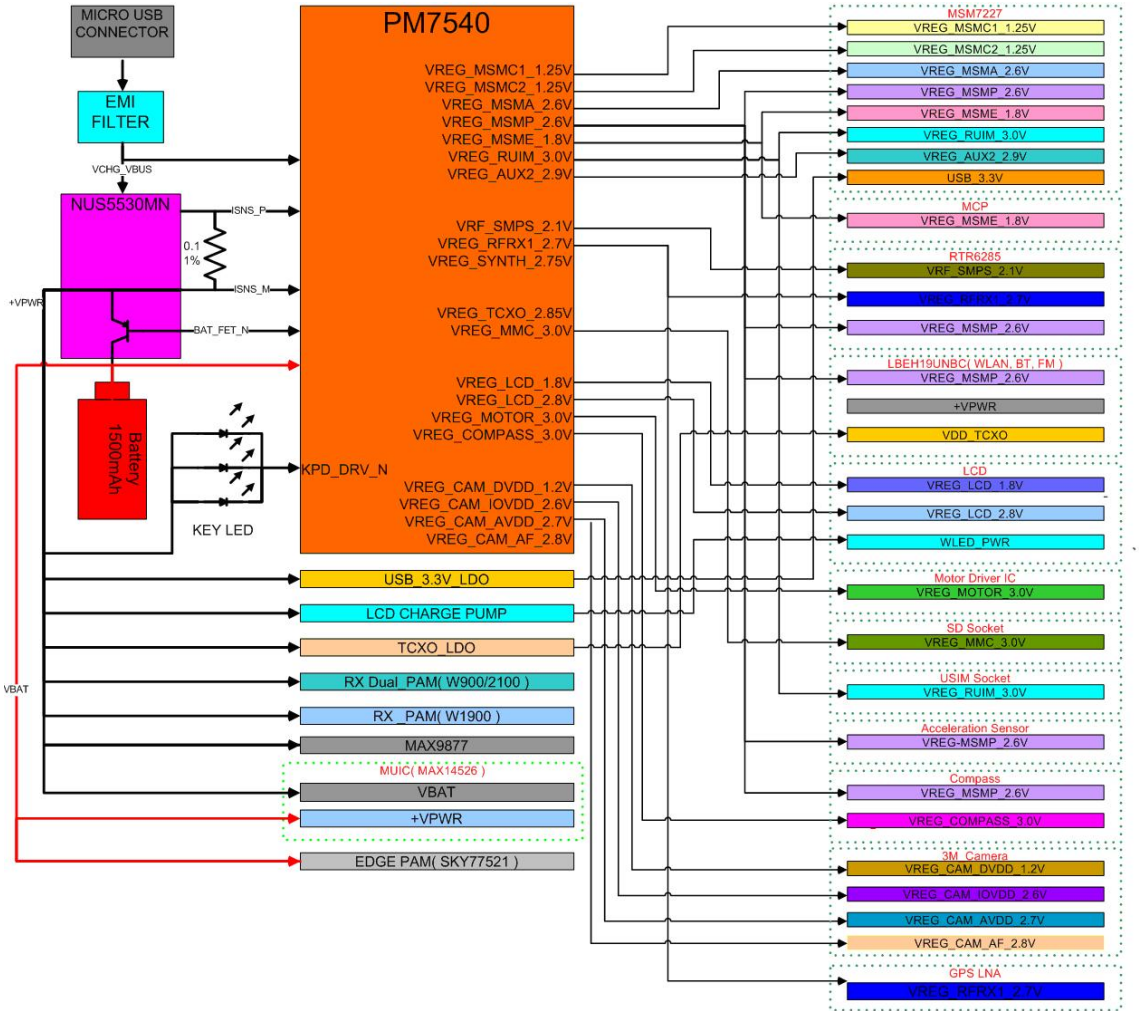

Figure. GT540 Power Block Diagram

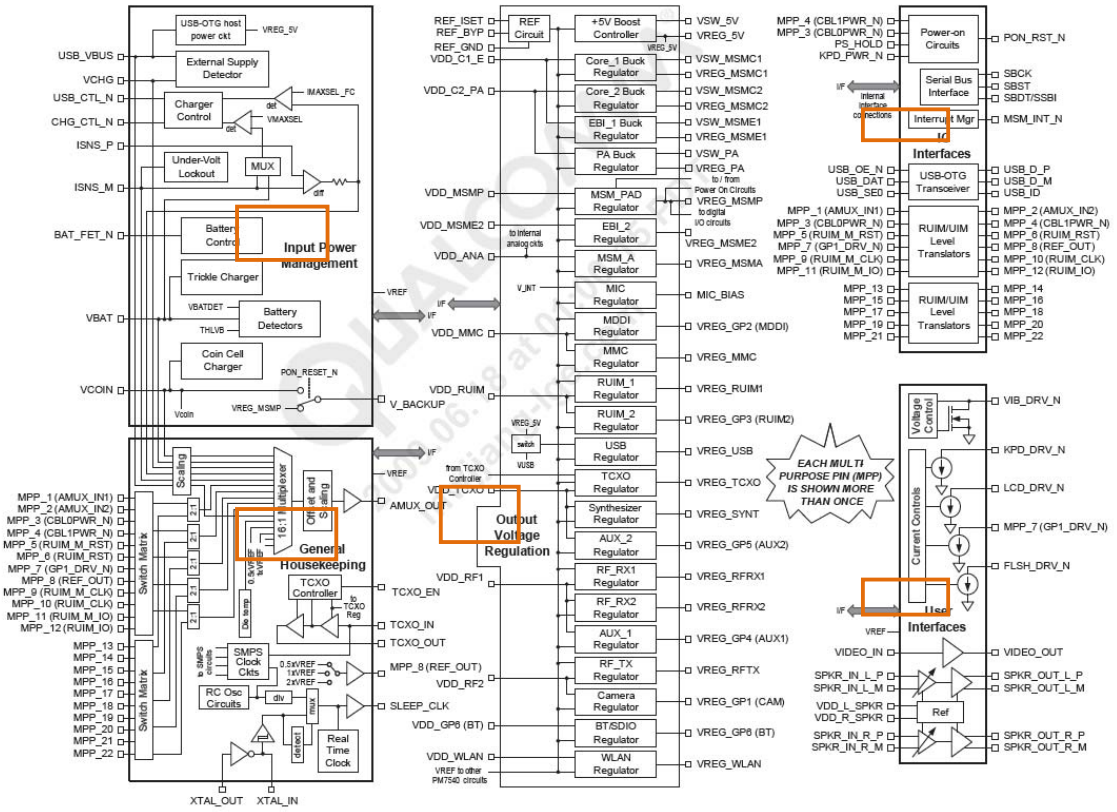

Figure. PM7540 functional block diagram

3.10.3. Charging control

A programmable charging block in PM7540 is used for battery charging. It is possible to set limits for the charging current. The external supply typically connects directly to pin (VCHG). The voltage on this pin (VCHG) is monitored by detection circuitry to ascertain whether a valid external supply is applied or not. For additional accuracy or to capture variations over time, this voltage is routed internally to the housekeeping ADC via the analog multiplexer. PM7540 circuits monitor voltages at VCHARGER and ICHARGE pins to determine which supply should be used and when to switch between the two supplies. These pins are connected to the Source (or emitter) and Drain (or collector) contacts of the pass transistor respectively.

3.10.3.1. Trickle Charging

Trickle Charging of the main battery, enabled through SBI control and powered from VDD, is provided by the PM7540 IC, The trickle charger is on-chip programmable current source that supplies current from VDD to pin (VBAT). Trickle charging can be used for lithium-ion and nickel-based batteries, with its performance specified below (3.2V). The charging current is set to 80mA.

Parameter	Min	Typ	Max	Unit
Trickle Current	60	80	100	mA

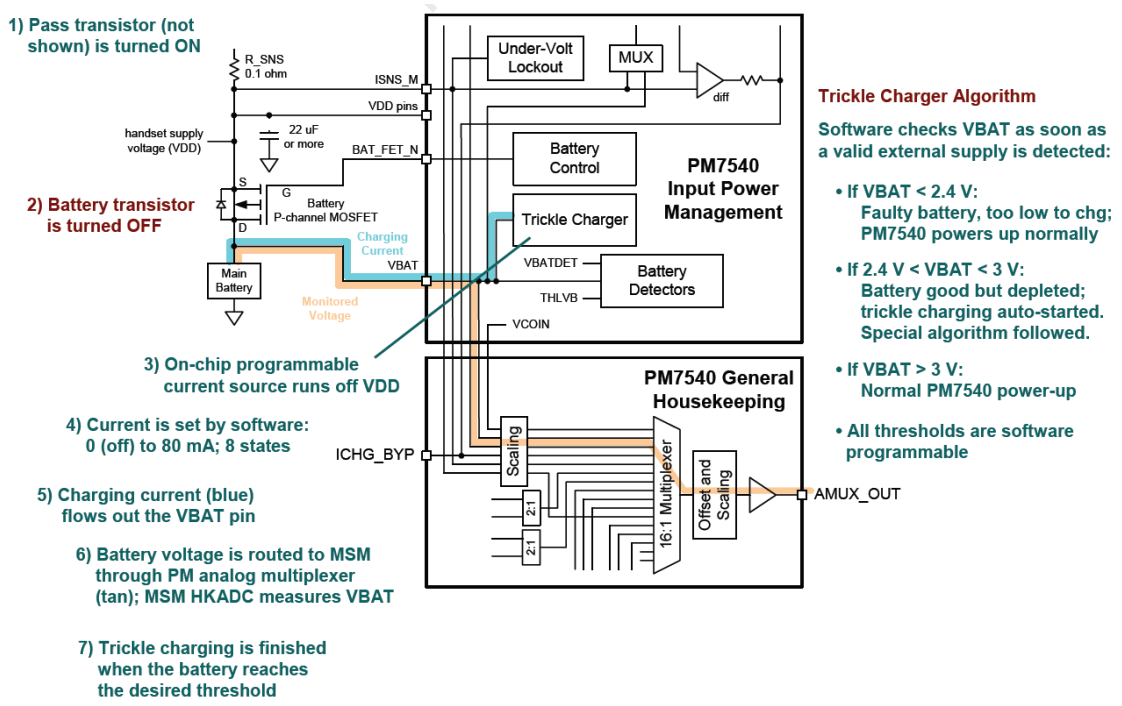

Figure. PM7540 Charging Flow (TC Charging)

3.10.3.2. Constant Current Charging

The PM7540 IC supports constant current charging of the main battery by controlling the charger pass transistor and the battery transistor. The constant current charging continues until the battery reaches its target voltage, 4.2V.

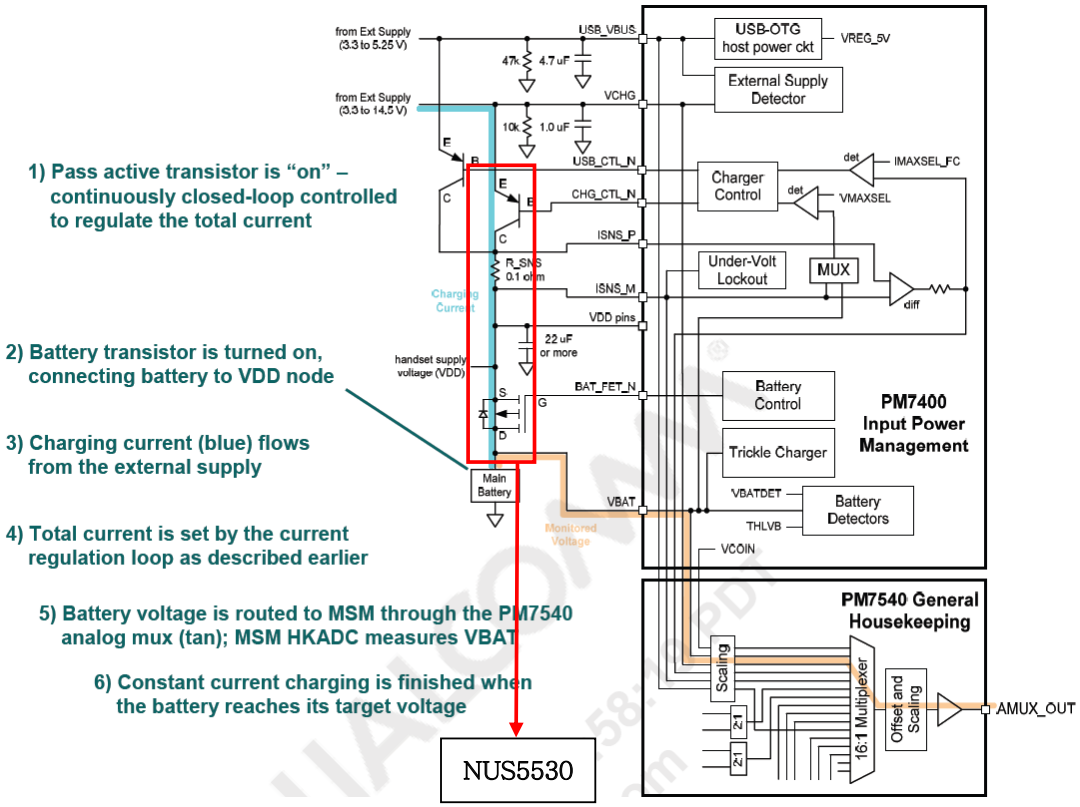

Figure. PM7540 Charging Flow (CC Charging)

3.10.3.3. Constant Voltage Charging

Constant voltage charging begins when the battery voltage reaches a target voltage, 4.2V. The end of constant voltage charging is commonly detected 10% of the full charging current.

3.10.3.4. GT540 Charging Specification

- Charging Method : CC & CV (Constant Current & Constant Voltage)
- Maximum Charging Voltage : 4.2V
- Maximum Charging Current : 700mA
- Nominal Battery Capacity : 1500mAh
- Charging time : Max. 3h 30m
- Full charge indication current (icon stop current) : 50mA

3.10.3.5. GT540 battery bar icon display

Table. GT540 battery bar specification

Battery Bar Number	Specification	단위
BAR 6 (Full)	90% over	Remain %
BAR 6 --> 5	90% → 89%	
BAR 5 --> 4	70% → 69%	
BAR 4 --> 3	50% → 49%	
BAR 3 --> 2	30% → 29%	
BAR 2 --> 1	15% → 14%	
BAR 1 --> 0	5% → 4%	
Low Battery Pop-up	4% ~ 15% : One Time popup (No call)	
Critical Low Battery Pop-up	0% ~ 3% : Level change마다 popup (No call)	
POWER OFF	0%	

3.11 External memory interface

3.11.1. MSM7227

The MSM7227 device was designed to provide two distinct memory interfaces. EBI1 was targeted for supporting DDR synchronous memory devices. EBI2 was targeted towards supporting slower asynchronous devices such as LCD, NAND flash, SRAM, NOR flash etc. To support the high-bandwidth, high-density, and low-latency requirements of the advanced on-chip applications, the MSM7227 IC has two high-speed, high-performance memory slave interfaces: the external bus interface 1 (EBI1) and the stack memory interface (SMI). To achieve higher bandwidth and better use of the memory device interface, the SMI accepts multiple commands for the external memory device. The SMI interface acts as a slave device to all of the bus masters within the MSM device. The masters arbitrate to gain access to the SMI, and upon obtaining the access, they issue commands to the SMI. The bus masters are connected to the SMI through an advanced extensible interface (AXI) bus bridge (or global interconnect block) and communicate over a 64-bit, non-blocking AXI bus protocol. The AXI bus bridge provides the arbitration logic for all of the bus masters.

- EBI1 Features
  - Support for only low-power memories at 1.8-V I/O power supply voltage
  - AXI bus frequencies up to 133 MHz
  - A 16-bit/32-bit static and dynamic memory interface
- DDR SDRAM interface features include:
  - Supports both 32-bit DDR SDRAM devices, up to 133-MHz bus speed
  - Supports auto precharge and manual precharge
  - Supports partial refresh
  - Separate CKE pin per chip-select to support partial operation mode
  - Idle power down to save idling power consumption
- EBI2 Features
  - Support for asynchronous FLASH and SRAM(16bit & 8bit).
  - Interface support for byte addressable 16bit devices(UB_N & LB_N signals).
  - 2Mbytes of memory per chip select.
  - Support for 8 bit/16bit wide NAND flash.
  - Support for parallel LCD interfaces, port mapped of memory mapped(8 or 16 bit)

3.11.2.GT540 External memory Interface

- Multi Chip Package : DDR SDRAM and NAND Flash merged 1 package
- 2Gbit Mobile DDR SDRAM(64Mb x32) / 4Gbit NAND Flash

Interface Spec				
Part Name	Product Gr	Maker	Operation Voltage	Speed
K524G2GACB-A050	NAND	SEC	1.8V	42ns
	SDRAM		1.8V	200MHz

3.12 H/W Sub System

3.12.1. RF Interface

3.12.1.1. RTR6285 (WCDMA_Tx, GSM_Tx/Rx)

MSM7227 controls RF part(RTR6285) using these signals.

- RTR6285_SSBI : SSBI I/F signals for control Sub-chipset
- RTR_TXON : Power AMP on RF part
- RTR_RX_I/Q_M/P, RTR_TX_I/Q_M/P : I/Q for T/Rx of RF
- RTR_DAC_REF : Reference input to the MSM Tx data DACs

3.12.1.2. the others

- TRK_LO_ADJ : TCXO(19.2M) Control
- PA_ON0/PA_RANGE0 : WCDMA(2100) TX Power Amp Enable
- ANT_SEL[0-3] : Ant Switch Module Mode Selection(WCDMA,GSM Tx/Rx,DCS-PCS Tx/Rx)
- GSM_PA_RAMP : Power Amp Gain Control of APC_IC

3.12.1.3. RF2815 (GPS LNA)

* GPS_LNA_EN : GPS LNA Enable Signal (GPS LNA Shutdown)

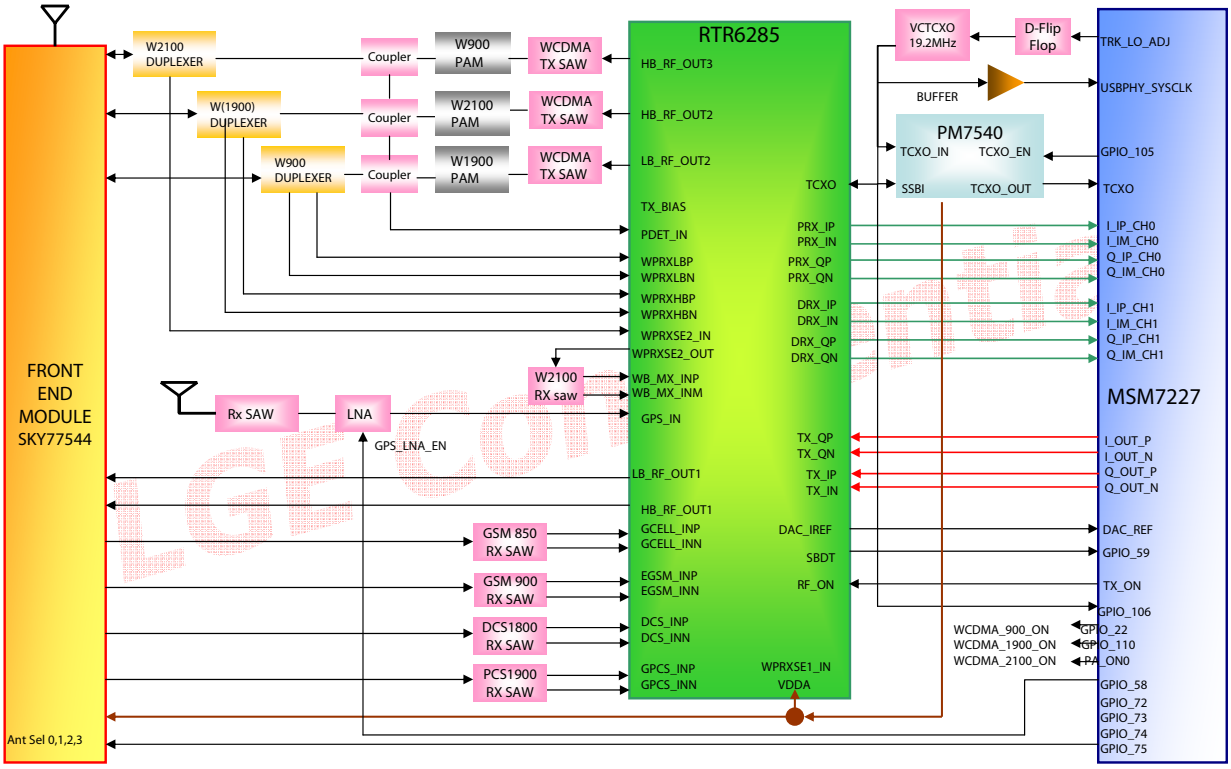

Figure. RF Interface Block Diagram

3.12.1.4. LBEH19UNBC-338 (BT / WiFi module)

1. WiFi

* WLAN_CMD : WLAN SDIO Command Line.
* WLAN_CLK : WLAN SDIO Clock Input.
* WLAN_SDIO[3:0] : WLAN SDIO Data Line.
* WLAN_RESET_N : Low asserting reset for WLAN core.
* WLAN_HOST_WAKEUP : WL_HOST_WAKEUP signal output.

2. BT

* BT_UART_RXD : Bluetooth UART Serial Input.
* BT_UART_RTS : Bluetooth UART Request to Send. Active-low request.
* BT_UART_CTS : Bluetooth UART Clear to Send. Active-low clear.
* BT_UART_TXD : Bluetooth UART Serial Output.
* BT_PCM_CLK : BT PCM clock, can be PCM-master (output) or PCM-slave (input).
* BT_PCM_DIN : BT PCM data input.
* BT_PCM_SYNC : BT PCM sync signal, can be PCM-master (output) or PCM-slave (input).
* BT_PCM_OUT : BT PCM data output.
* BT_WAKEUP : BT Wakeup Input.
* BT_HOST_WAKEUP : BT Host Wakeup Output
* BT_RESET_N : Low asserting reset for BT core.

3. Common

* WLAN_REG_ON : If low the internal regulators will be disabled.
* SLEEP_CLK : LPO clock (32.768kHz) input. Used for low-power mode timing.
* CLK_IN : Crystal amplifier input or frequency reference input.
* CLK_REQ : Crystal Circuit / Reference Clock Enable (active-high)

4. FM Radio

* FM_ANT : FM RF input.
* SLEEP CLK : External reference oscillator input. (32.768KHz)
* FM_R : Right audio line output – digital input data.
* FM_L : Left audio line output – digital frame synchronization.

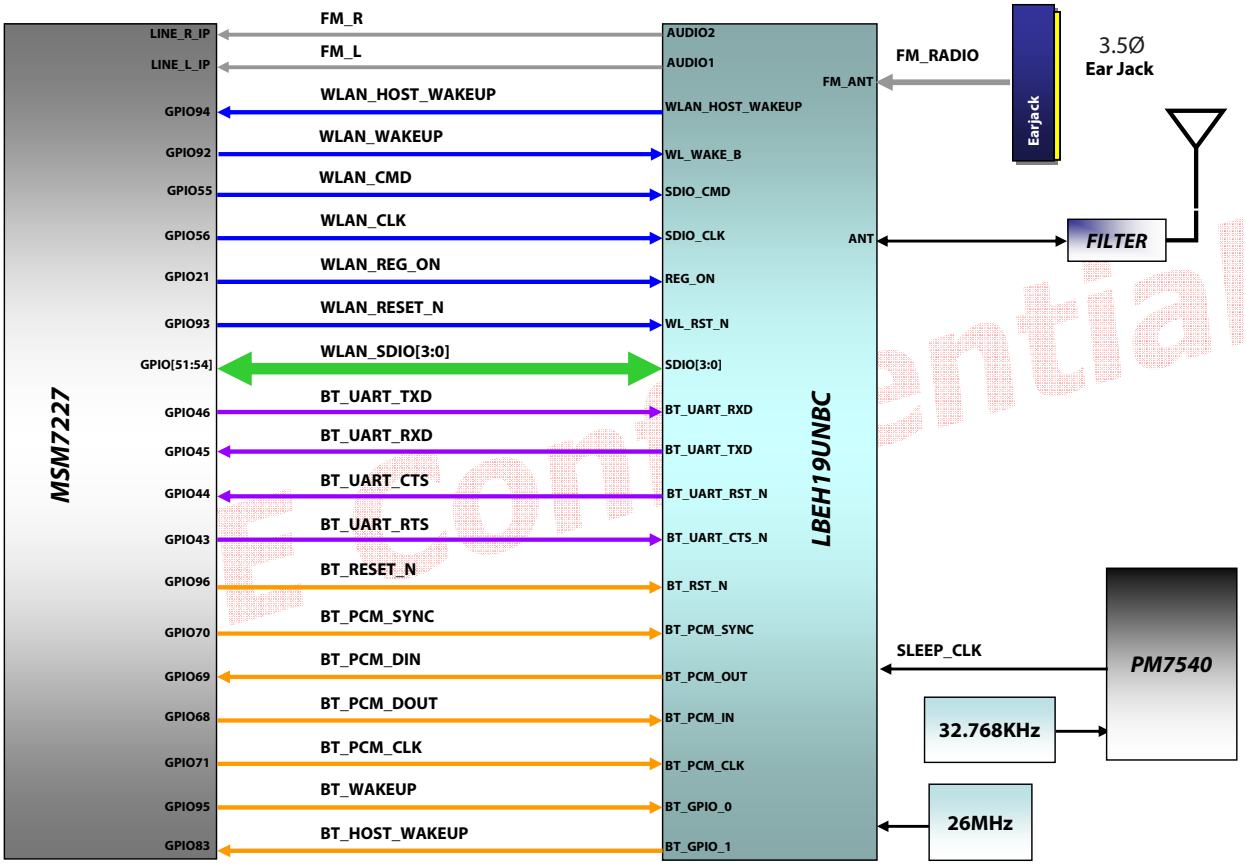

Figure. Wifi/BT/FM Interface Block Diagram

3.12.2 MSM Sub System

3.12.2.1. USIM Interface

SIM interface scheme is shown in Figure.

And, there control signals are followed

- USIM_CLK : USIM Clock
- USIM_Reset : USIM Reset
- USIM_Data : USIM Data T/Rx

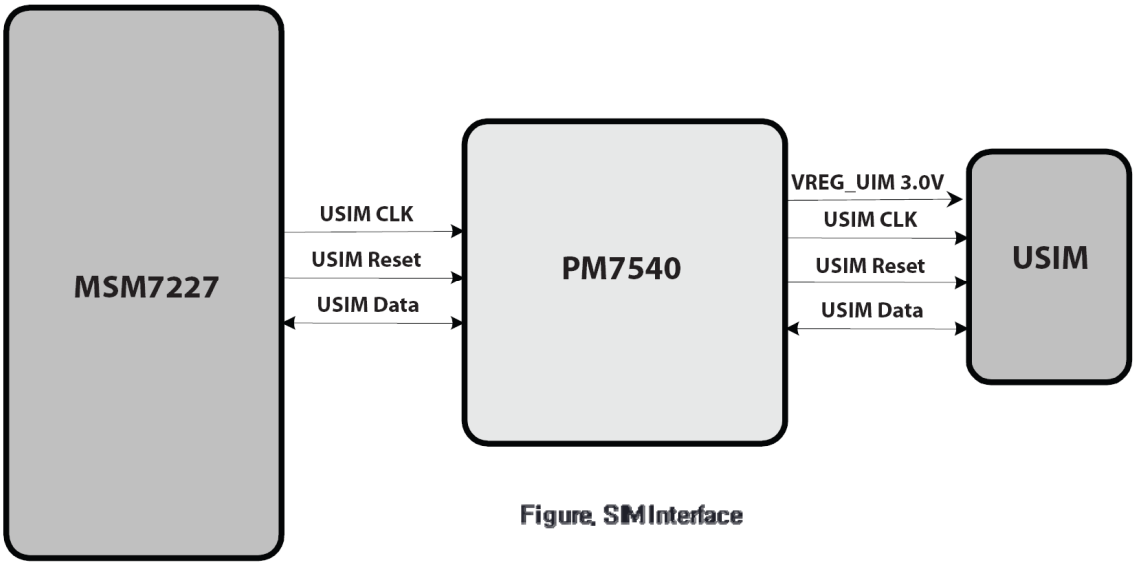

Figure. SIM Interface

3.12.2.2. UART Interface

UART signals are connected to MSM GPIO through IO connector with 115200 bps speed.

GPIO_Map	Name	Note
GPIO_86	UART3_RX	Data_Rx
GPIO_87	UART3_TX	Data_Tx

Table. UART Interface

3.12.2.3. HS-USB

The High-Speed USB module contains an embedded UTMI+ core with a built-in transceiver eliminating the need for an external PHY. The HS-USB port is a standard 4-pin interface that connects directly to the USB connector (USBPHY_DP, USBPHY_DN, USBPHY_ID and USBPHY_VBUS). Two additional pins are required for PHY operations which include an external reference resistor pin (USBPHY_REXT) and a USB system clock pin which the USB PHY uses to lock its internal PLL (SYS_CLK)

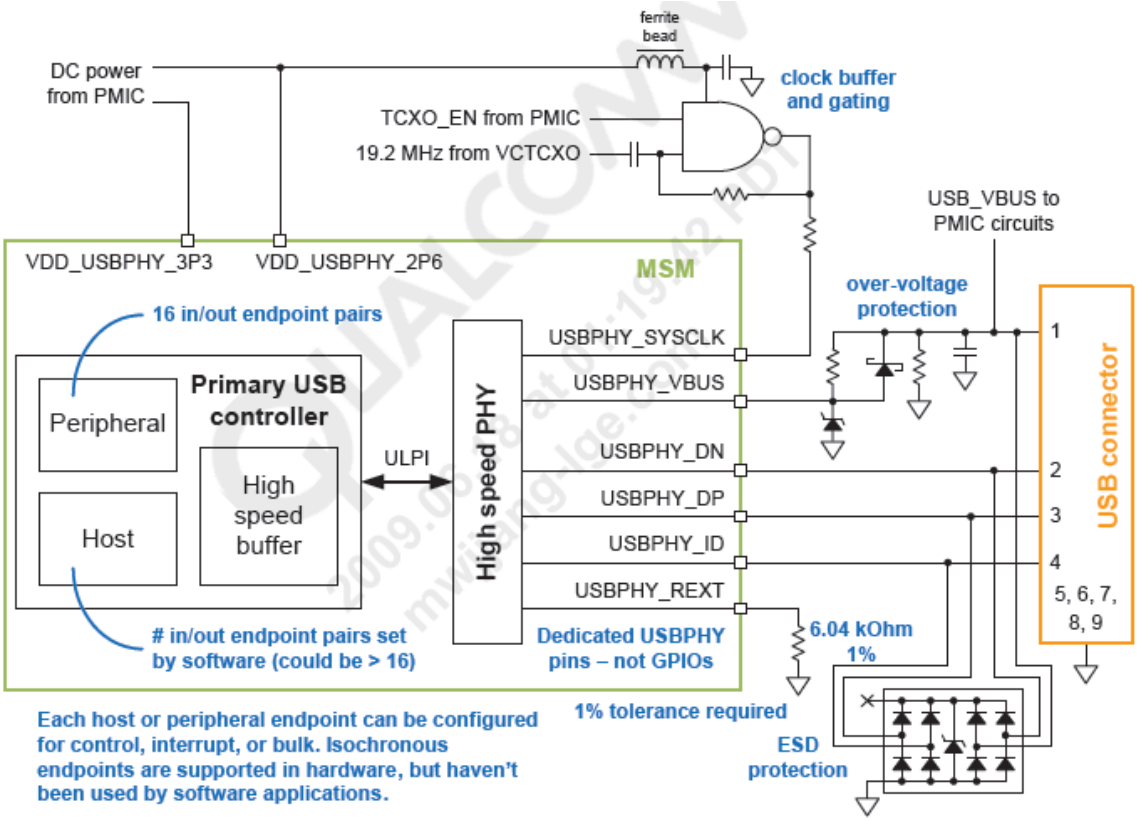

Figure. HS-USB connections and architecture

3.12.3 KEY

3.12.3.1 Side key

There are 4 side key buttons that are controlled by MSM7227.

Refer to the circuit.

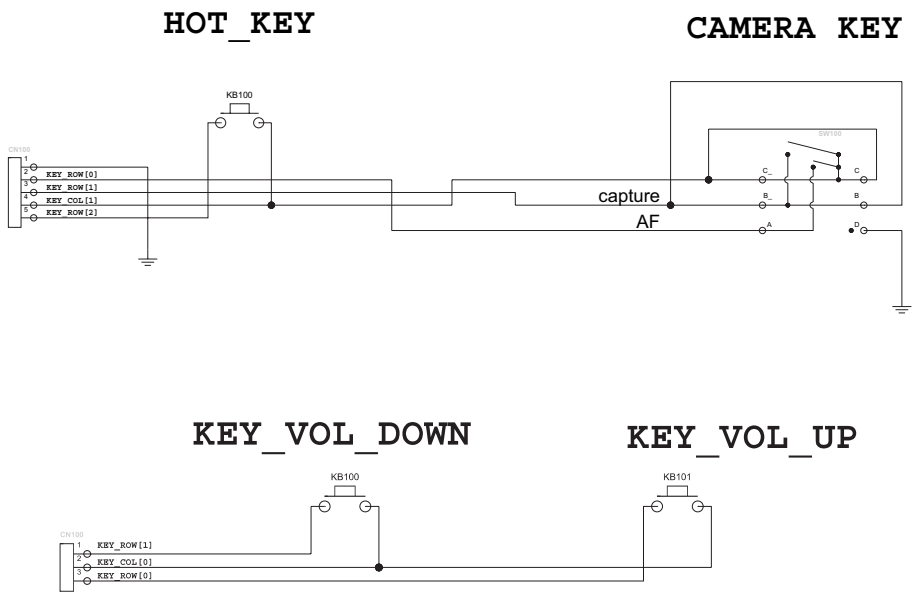

Figure. Side key

3.12.3.2 QTKEY

There are 2 Front buttons(SEND,HOME) that are controlled by MSM7227.

'Power Button' Key is connected to PMIC(PM7540:KPD_PWR_N)

Refer to the circuit.

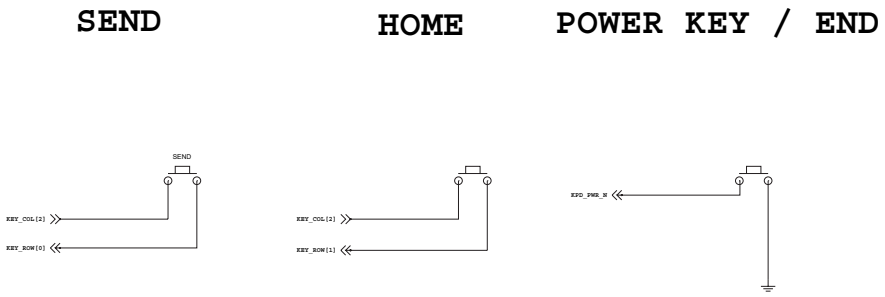

Figure. Front key

3.12.3.3 KEY Backlight

There are 2 White side view LED, 2 white LED in key backlight circuit

Those LEDs are driven by KPD_DRV_N1/2 line from PM7540.

Refer to the circuit.

LED LIGHT

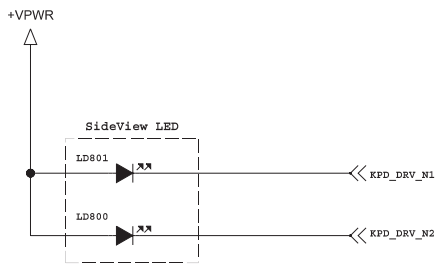

Figure. KEY Backlight

3.12.4.1 Touch Windows Interface

Touch screen & Two Touch buttons (menu, back) are a press sensor with an attached flexible PCB.

4-wire resistive touch pannel. Resistive touch screen use the voltage divider principle to generate voltage that represent X and Y coordinates.

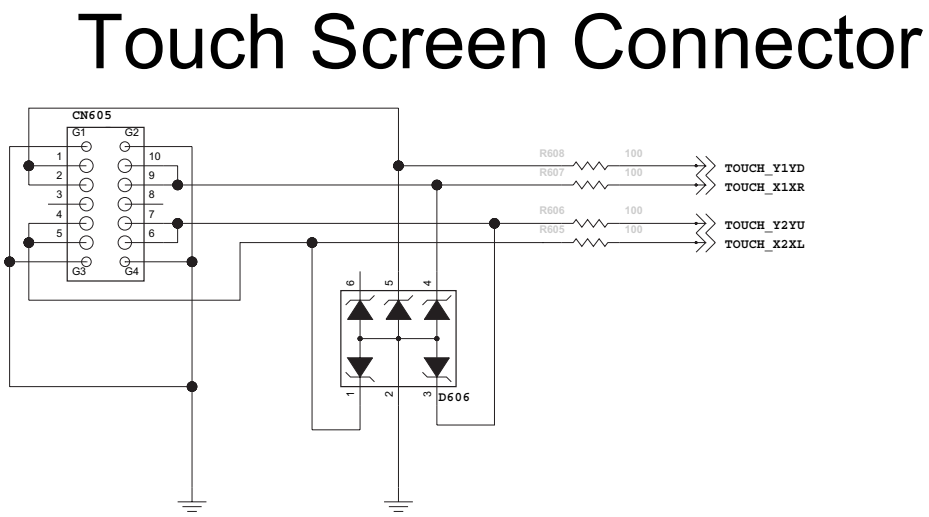

Figure. Touch window Sensor Schematic

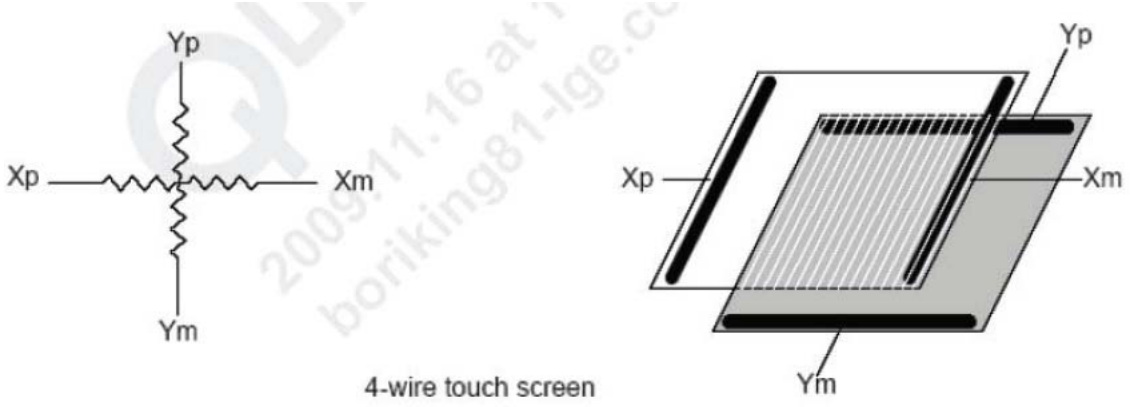

Figure. Touch window Sensor Block Diagram

3.13. Audio and sound

3.13.1. Overview of Audio path

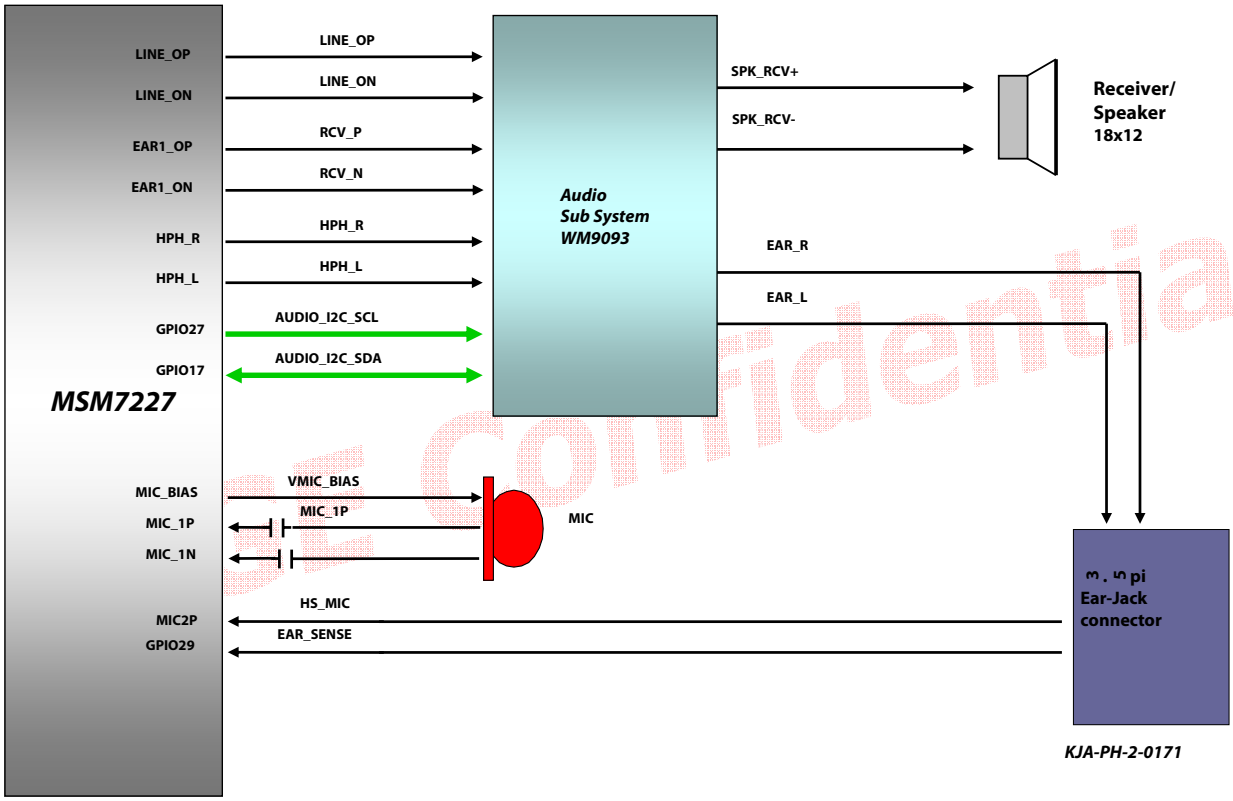

Figure. Block diagram of Audio & Sound path

3.13.2. Audio signal processing & interface

3.13.2.1 MSM7227 audio interface

The MSM7227A audio front end comprises the stereo wideband codec, PCM interface, and additional DSP audio processing. The stereo wideband codec allows the MSM7227 device to support stereo music/ringer melody applications in addition to the 8 kHz voice band applications on the forward link.

In the audio transmit path, the device operates as 13-bit linear converter with software, selectable 8 kHz and 16 kHz sampling rate. In the audio receive path, the device operates as a software-selectable 13-bit or 16-bit linear converter with software selectable 8 kHz,16 kHz, 22.05 kHz, 24 kHz, 32 kHz, 44.1 kHz, or 48 kHz sampling rate. Through software, the Rx path can be configured as either a mono or stereo output. New to the MSM7227 device is a transmit (Tx) ADC path that now supports stereo wideband sampling. The integrated codec contains all of the required conversion and amplification stages for the audio front end. The codec operates as a 13-bit linear codec with the transmit (Tx) and receive (Rx) filters designed to meet ITU-T G.712 requirements.

The codec includes a programmable side tone path for summing a portion of the Tx audio into the Rx path. An on-chip voltage/current reference is provided to generate the precise voltages and currents required by the codec. This circuit requires a single capacitor of 0.1 µF to be connected between the CCOMP and GND pins. The on-chip voltage reference also provides a microphone bias voltage required for electret condenser microphones typically used in handset applications. The MICBIAS output pin is designed to provide 1.8 V DC while delivering as much as 1 mA of current.

Audio decoder summing and headset switch detection are included. The codec interface includes the amplification stages for both the microphone and earphone. On the transmit (Tx) path, the interface supports two differential microphone inputs, a differential auxiliary input, and a stereo line input. On the receive (Rx) path the interface supports one differential earphone output, a stereo single-ended headphone output, one differential auxiliary output, and stereo single-ended line outputs. The codec is configured by the codec SBI registers. The codec interface is shown in Figure.

Also part of the audio front end is the PCM interface. The PCM interface allows for an external codec to be used instead of the internal codec. This interface can be used in I2S mode which will allows for an external stereo DAC to be used. Finally, the audio front end includes additional DSP audio processing that does gains, filtering and other audio processing.

The DSP audio processing is configured through the QDSP5000 command types and is not directly controlled by the microprocessor.

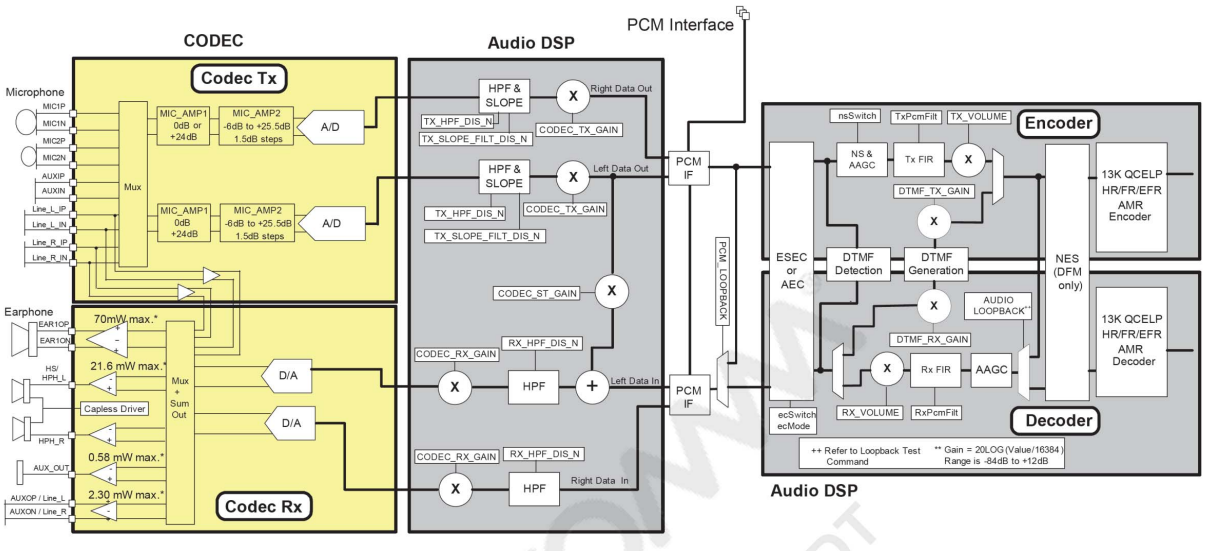

Figure. Detailed diagram of MSM7227 audio interface

3.13.2.2 WM9093 audio interface

The WM9093 is a high performance low power audio subsystem, including headphone driver and Class AB/D earpiece/speaker driver. The Class D speaker driver support 650mV output power at 3.6V, 1%THD.

The unique dual mode charge pump architecture provides ground referenced headphone outputs removing the requirement for external coupling capacitors. Class G technology is integrated to increase the efficiency and extend playback time by optimizing the headphone driver supply voltages according to the volume control.

The flexible input configuration allows single ended or differential stereo inputs. Mixers allow highly flexible routing to the outputs, A 'voice Bypass' path is also available for low-power voice applications.

The WM9093 is controlled using a two-wire I2C interface. An integrated oscillator generates all internal clocks. Removing the need to provide any external clock.

Separate mixer and volume controls are provided for each headphone and speaker driver. Automatic Gain control limits the speaker output signal in order to prevent clipping. DC offset correction to less than 1mV Guarantees a pop/click-free headphone start up.

The WM9093 is available in a 2.0mm × 2.5mm 20-bump CSP package.

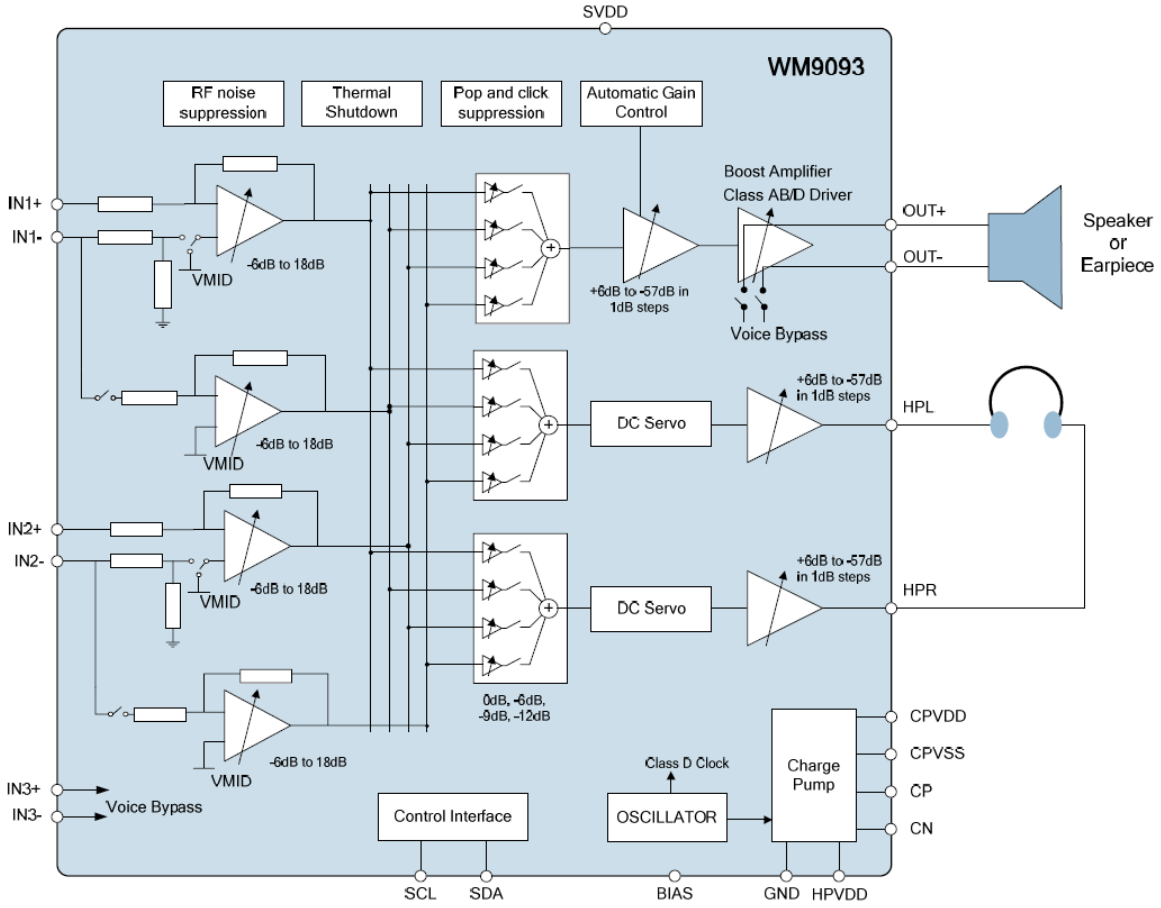

Figure. Detailed diagram of WM9093 audio interface

MSM7227 Block

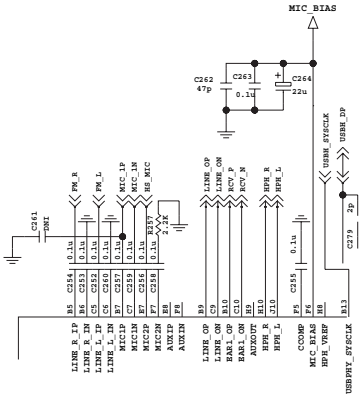

Handset main MIC Block

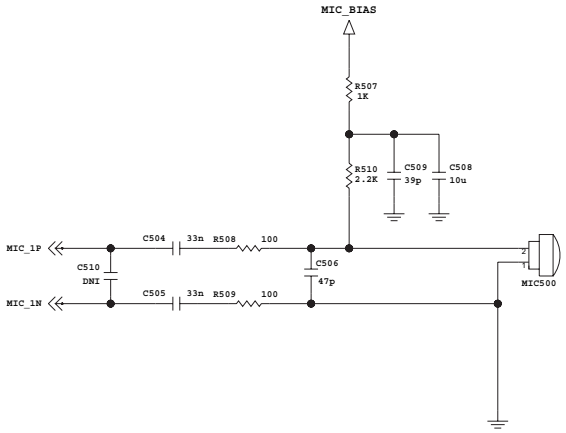

Head Set Jack Block

3.5 EAR_JACK

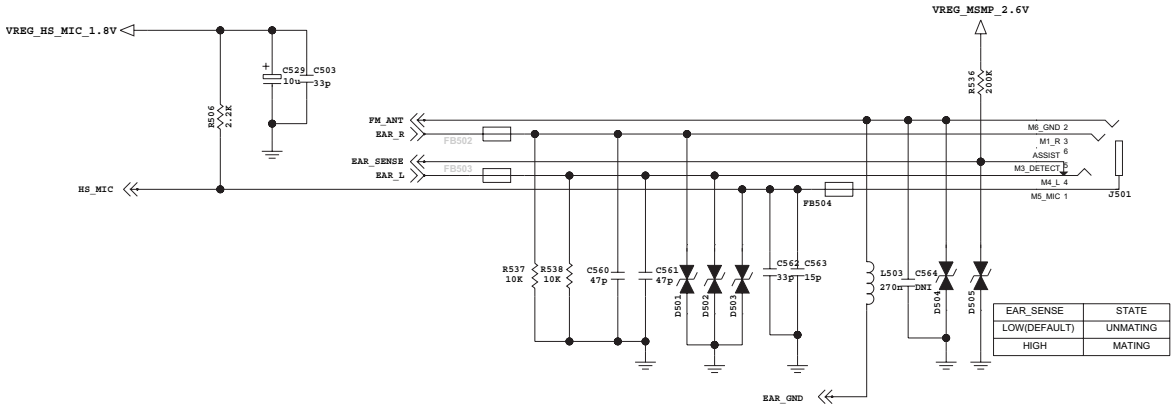

EAR_SENSE	STATE
LOW(DEFAULT)	UNMATING
HIGH	MATING

Audio Subsystem(WM9093) Block

Audio SUB SYSTEM

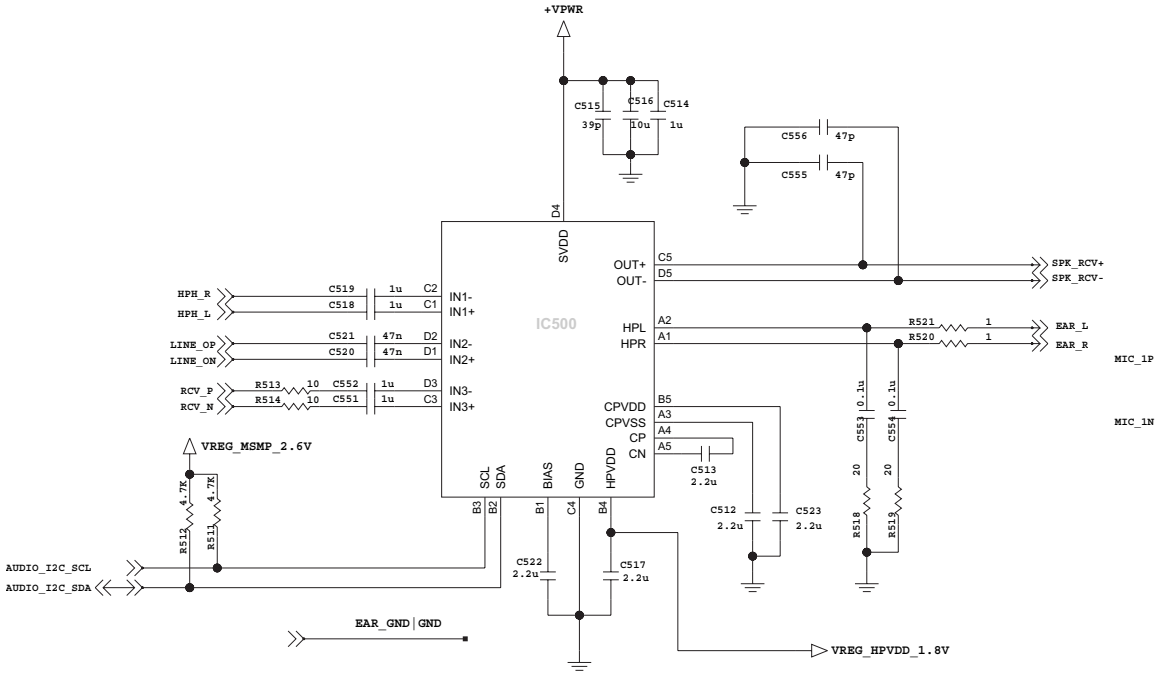

3.14 Display

LCD module is connected to Main PCB with 24-pin connector.

The LCD is controlled by MDDI Interface in MSM7227.

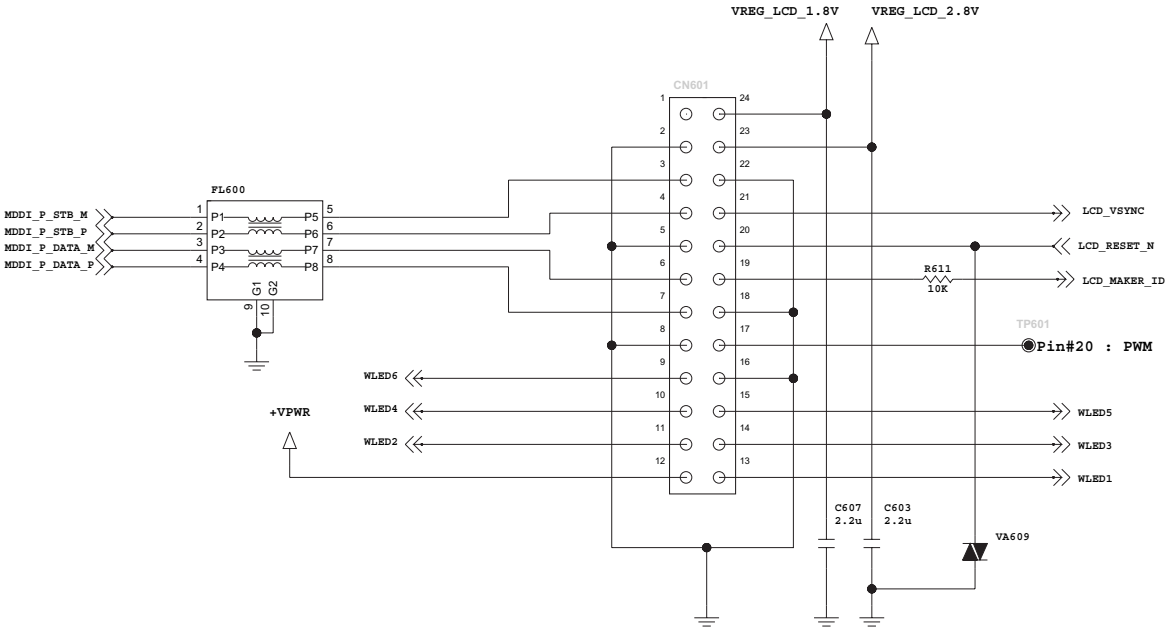

Figure. Schematic of LCD connector (Main Board)

Pin No.	Symbol	Description
1	LED_AN	LED Anode Connection
2	LED_C2	LED2 Cathode Connection
3	LED_C4	LED4 Cathode Connection
4	LED_C6	LED6 Cathode Connection
5	GND	Ground (0V)
6	MDDI_DATA_P	Differential DATA Line
7	MDDI_DATA_M	Differential DATA Line
8	GND	Ground (0V)
9	MDDI_STB_P	Differential STROBE Line
10	MDDI_STB_M	Differential STROBE Line
11	GND	Ground (0V)
12	OPEN	N.C
13	IOVCC	IO Voltage
14	VCI	Analog Voltage
15	GND	Ground (0V)
16	VSYNC-OUT	Vsync out Signal
17	RESET	RESET SIGNAL
18	MAKER_ID(HIGH)	ID_Maker
19	GND	Ground (0V)
20	PWM	LED PWM (CABC)
21	GND	Ground (0V)
22	LED_C5	LED5 Cathode Connection
23	LED_C3	LED3 Cathode Connection
24	LED_C1	LED1 Cathode Connection

Table. Interface between LCD Module and MAIN Board

3.15 Motion Sensor

According to tilt the cell phone, the screen is had rotated automatically.

U4 :BMA150 IC used I2C interface to MSM7227

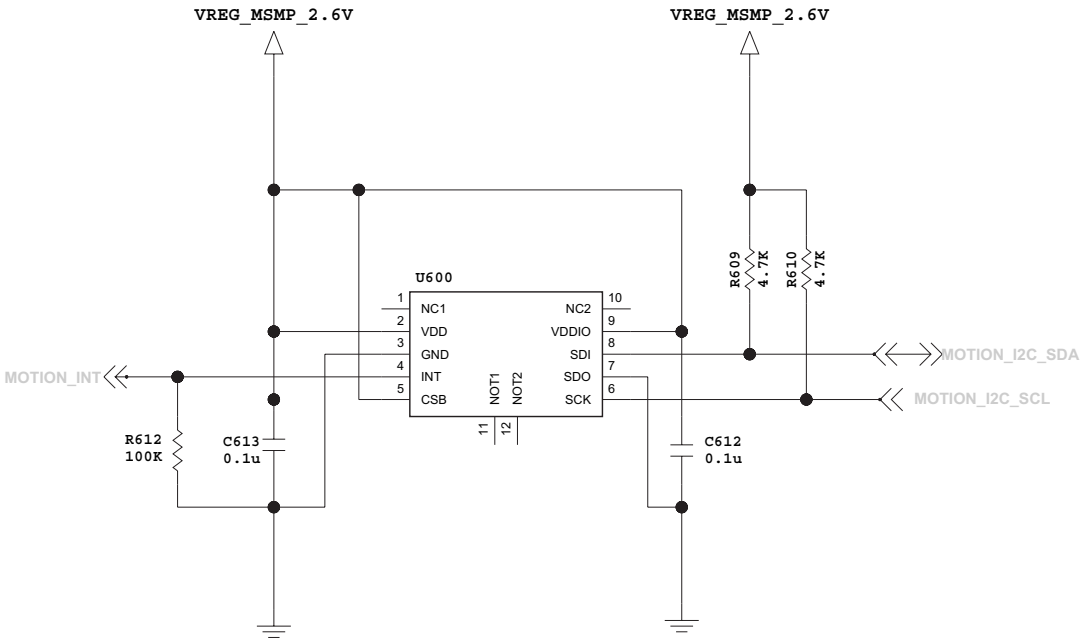

Figure. Motion Sensor Schematic

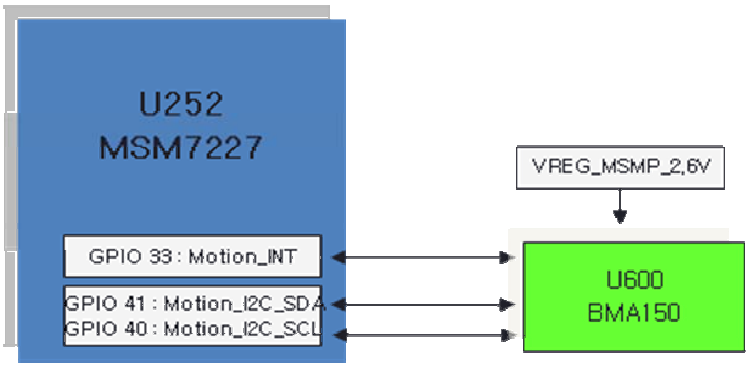

Figure. Motion Sensor Schematic Block Diagram

3.16 Vibrators

The strength of vibration is determined by the duty cycle of PWM (VIB_PWM)

U501 : SM100 is Linear motor driver IC.

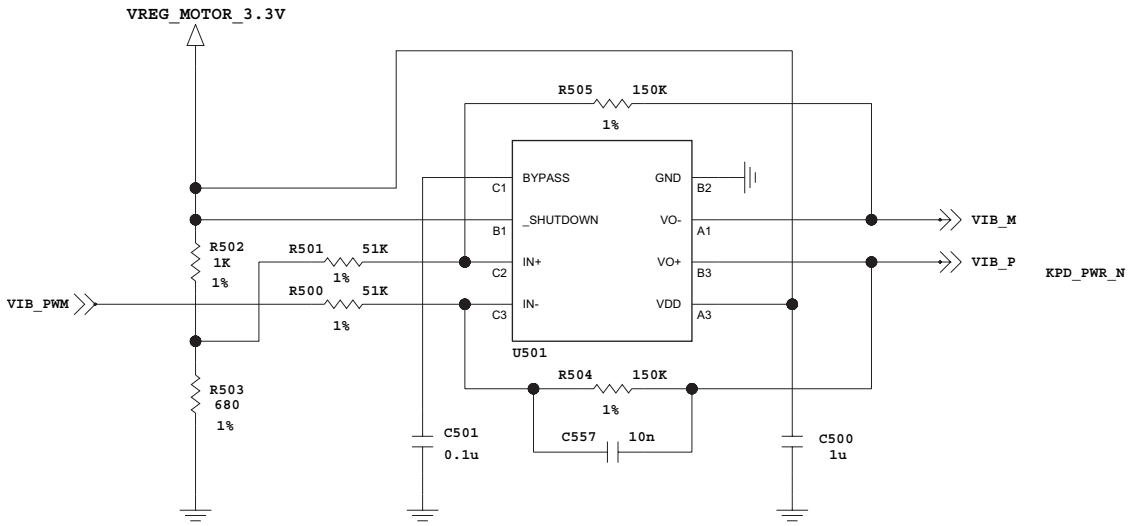

Figure. Linear Moter Drive IC Schematic

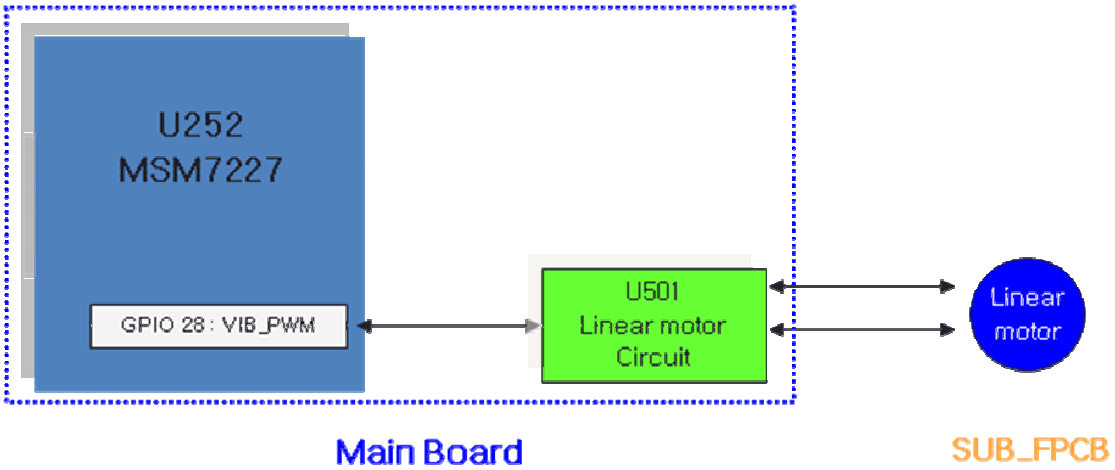

Figure. Vibrator Block Diagram

3.17 Compass Sensor

If a costomer buy the application SW, The Sensor Support a Eletric Compass function

U602 : AK8973 IC used I2C interface to MSM7200A

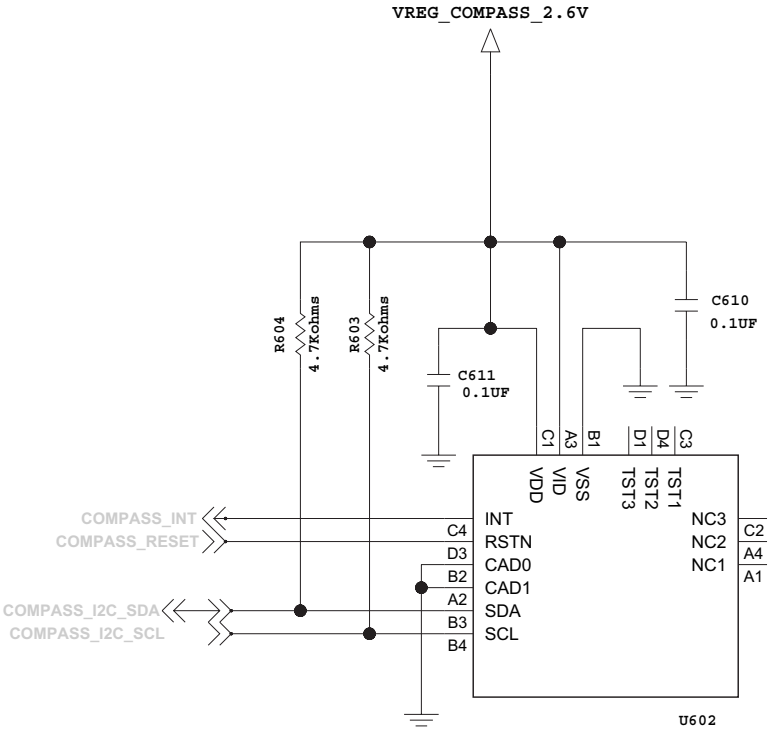

Figure. Compass Sensor Schematic

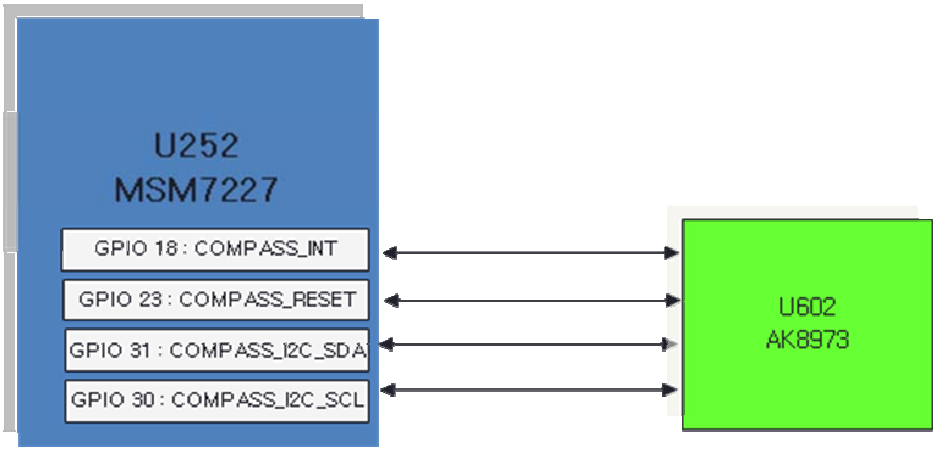

Figure. Compass Sensor Schematic Block Diagram

3.18 Main Features

1. LG GT540 Main Features

- Bar Type Simple & Stylish design
- UMTS 2100 + UMTS900+ GSM 900 + DCS 1800 + PCS 1900 + GSM850 based GSM/GPRS/EDGE/UMTS
- HSDPA 7.2Mbps/ HSUPA 2.0Mbps
- TFT Main LCD(3.0' HVGA, 320 x 480)
- Resistive Touch Window
- 3M AF Camera
- 3.5Phi Stereo Headset & Speaker phone
- Mobile XMF –Mobile DLS / Scaleable Polyphony
- MP3/AMR/AAC/AAC/WAV/WMA decoder and play
- MPEG4 encoder/decoder and play/save
- JPEG en/decoder
- Supports Bluetooth and HS-USB
- Supports WLAN
- Supports FM Radio
- 1500 mAh (Li-Ion Polymer)

2. GT540 Main Component

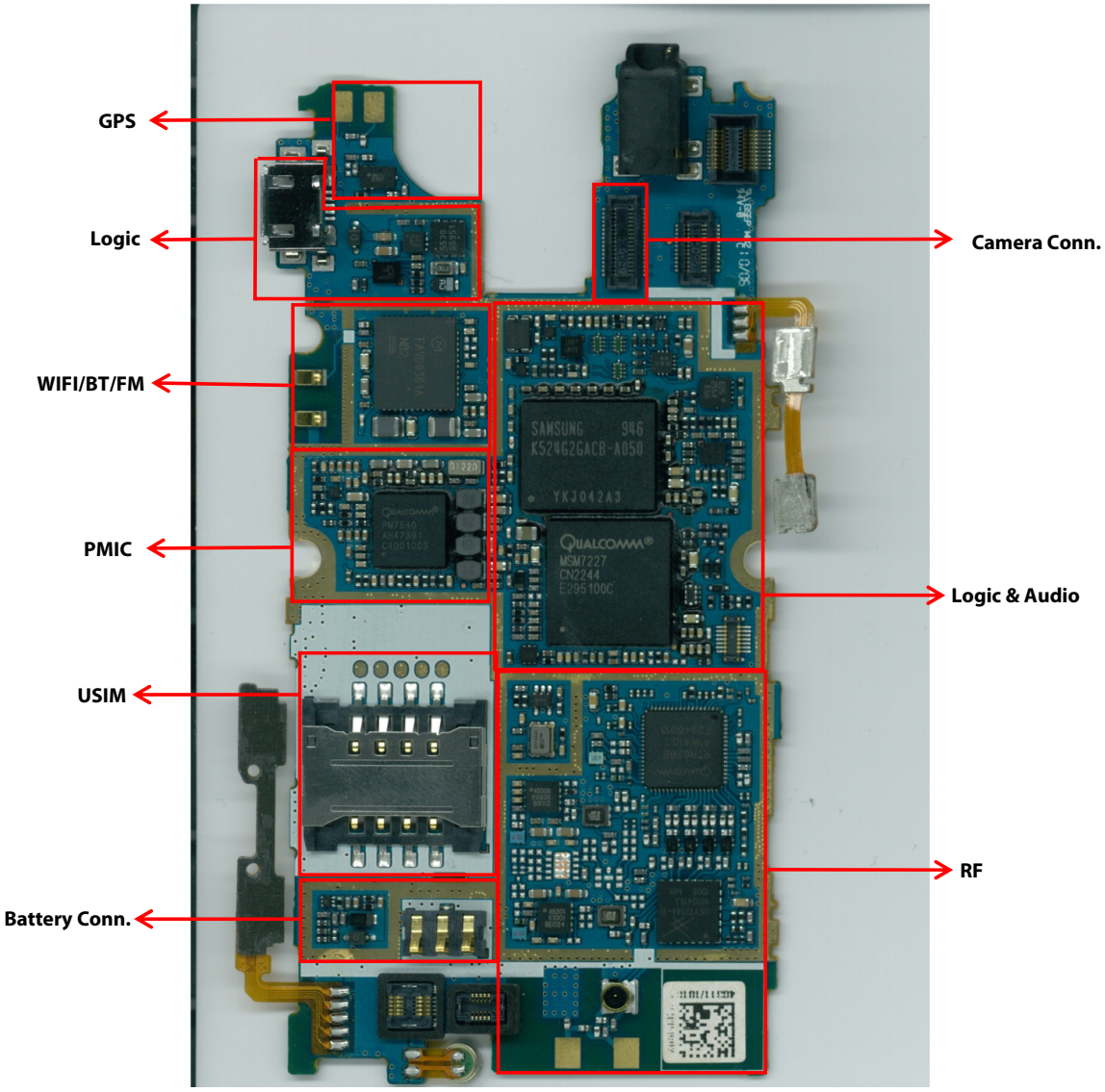

Main board, BOTTOM

2. GT540 Main Component

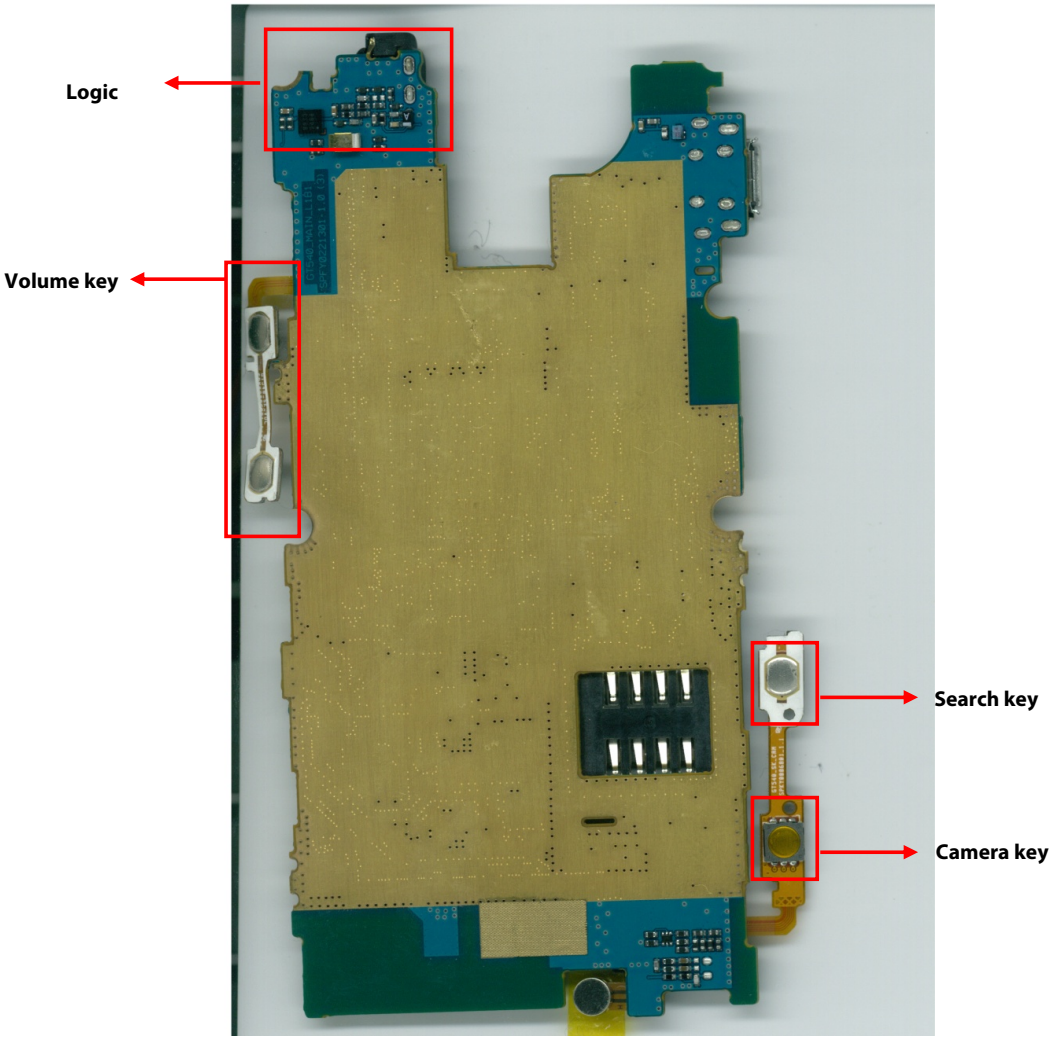

Main board, Top

2. GT540 Main Component

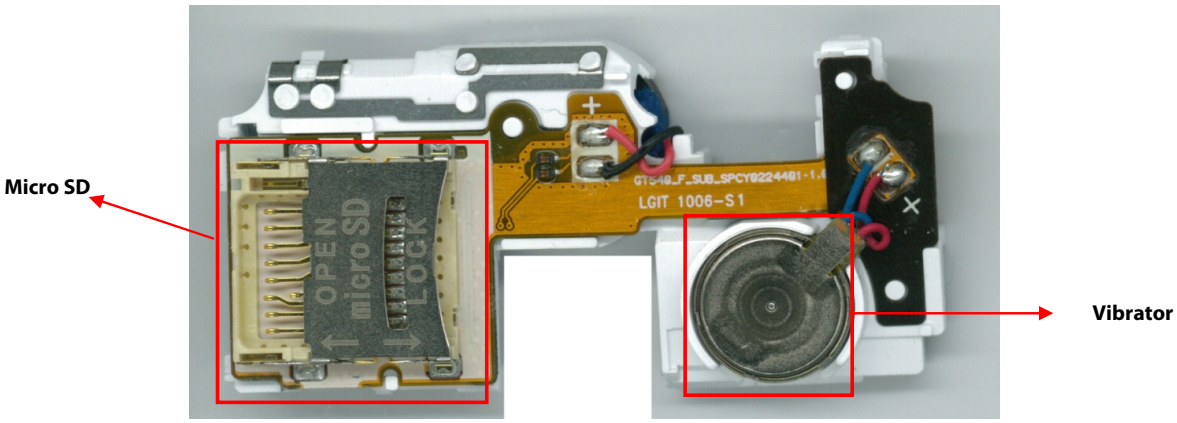

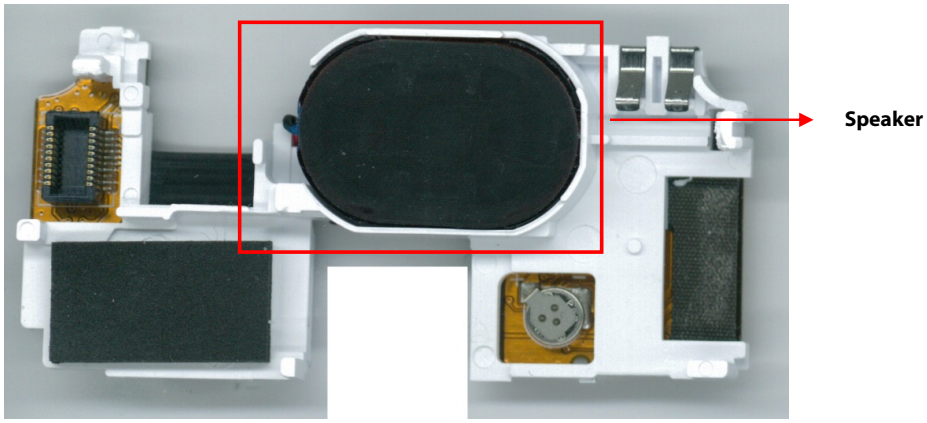

Sub board

RF

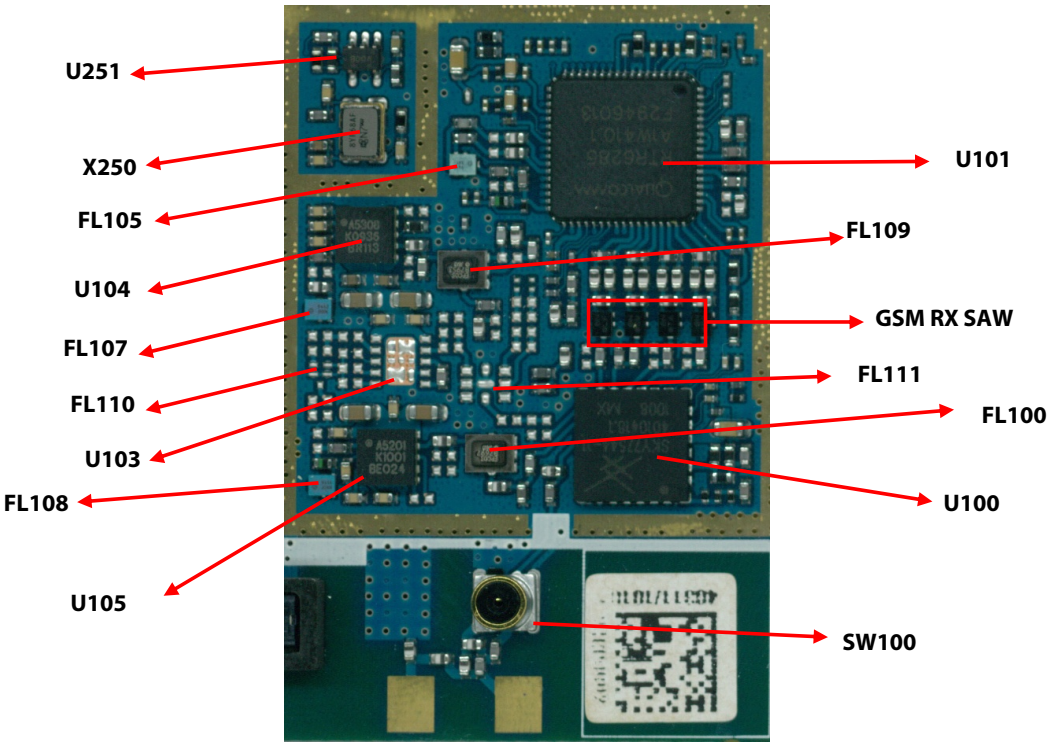

Reference	Description	Reference	Description
U101	RTR6285	FL107	WCDMA (VIII) TX SAW Filter
U100	GSM PAM/FEM module	FL100	WCDMA (I) Duplexer
U103, U104, U105	WCDMA PAM	FL111	WCDMA (II) Duplexer
U251	TCXO Buffer	FL109	WCDMA (VIII) Duplexer
X250	TCXO	FL105	WCDMA (1) Rx LNA
FL108	WCDMA (I) TX SAW Filter	FL101, FL102, FL103, FL104	GSM RX SAW Filter
FL110	WCDMA (II) TX SAW Filter	SW100	RF Antenna connector

Logic & Audio

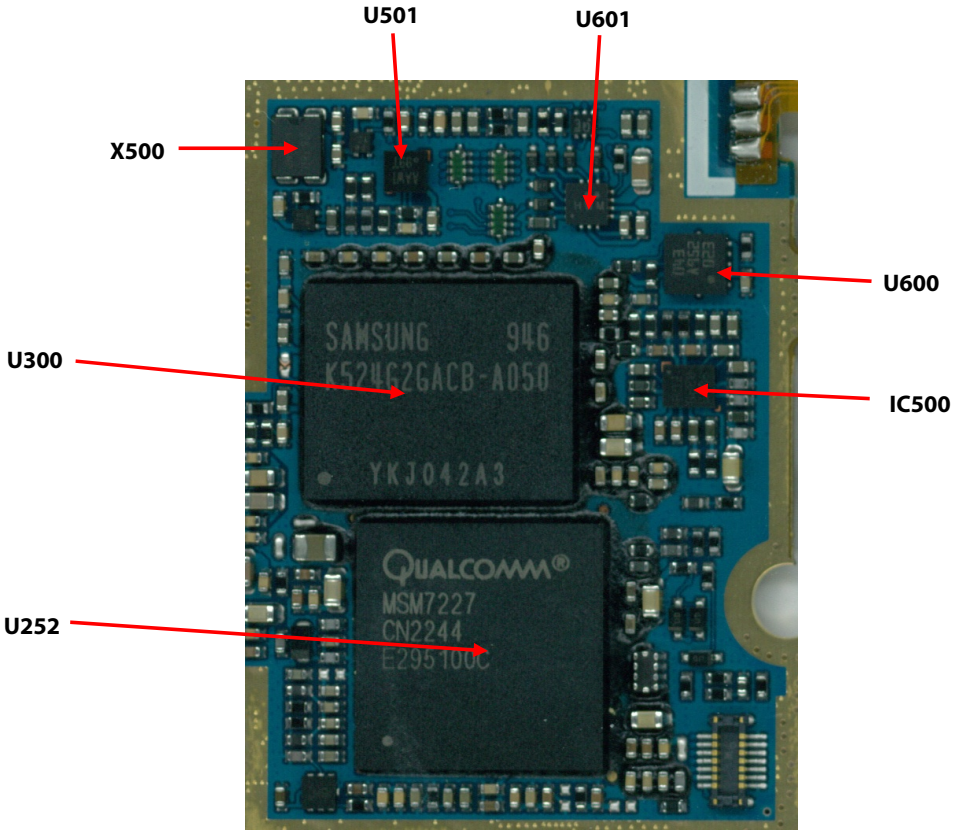

Reference	Description	Reference	Description
U252	MSM7227	U601	BLU CHARGE PUMP
U300	Memory	U600	Motion Sensor
X500	26MHz TCXO	IC500	WM9093
U501	MOTOR DRIVER		

USB & GPS/WIFI

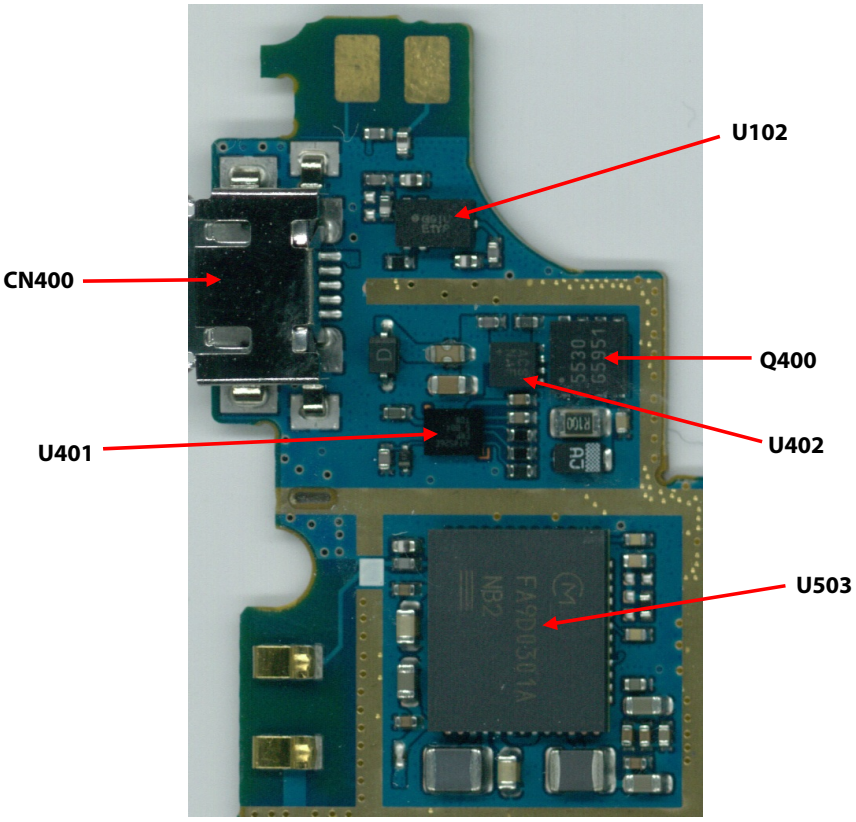

Ref.	Description	Ref.	Description
CN400	uUSB connector	Q400	FET for Batt Charging
U401	MUIC	U402	OVP IC
U102	GPS LNA	U503	WIFI & BT module

PMIC / Battery / Connector

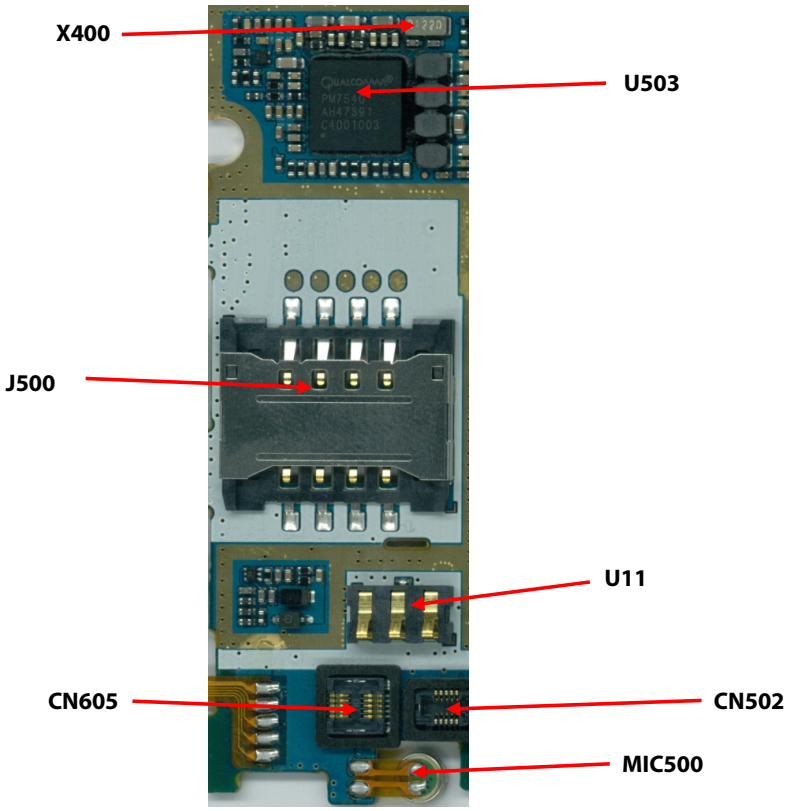

Ref.	Description	Ref.	Description
U503	PM7540	CN605	Touch screen Connector
X400	RTC Crystal	CN502	Front Key Connector
J500	USIM Connector	MIC500	Microphone
U11	Battery Connector		

4. Trouble Shooting

4.1 RF Component

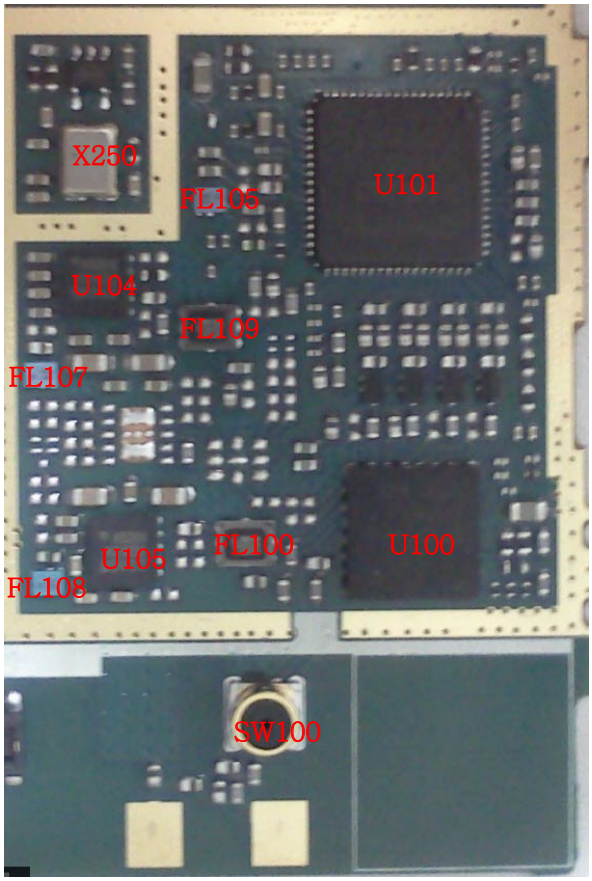

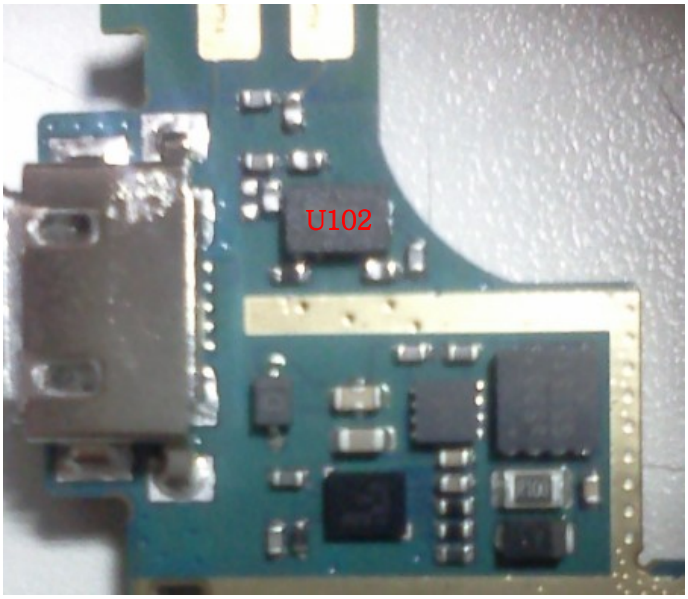

RF component (WCDMA / GSM)

Reference	Description	Reference	Description
U101	RTR6285(Transceiver)	FL109	WCDMA (VIII) Duplexer
U100	GSM TX Module (FEM + GSM/EDGE PAM)	FL105	WCDMA (I) RX SAW Filter
U104, U105	WCDMA Band (VIII),(I) PAM	X250	VCTCXO(19.2MHz)
FL108	WCDMA (I) TX SAW Filter	U102	GPS LNA
FL107	WCDMA (VIII) TX SAW Filter	SW100	RF Antenna Connector
FL100	WCDMA (I) Duplexer		

4.2 SIGNAL PATH

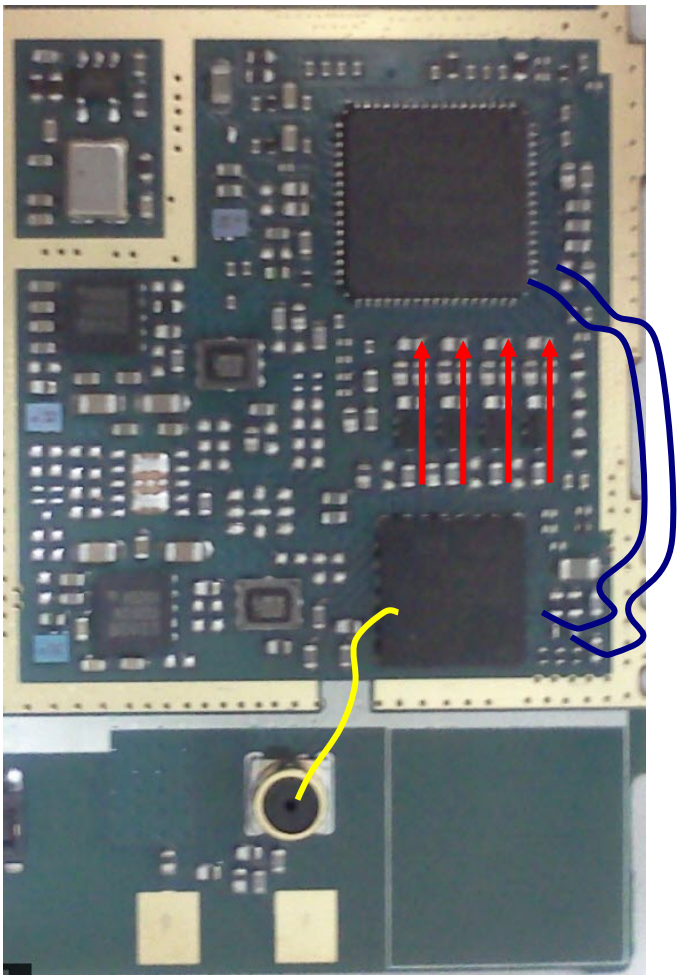

GSM850/GSM900/DCS/PCS's RX/TX Signal PATH

A. GSM850/GSM900/DCS1800/PCS1900 RX PATH

B. GSM850/GSM900/DCS1800/PCS1900 TX PATH

C. COMMON TX/RX PATH

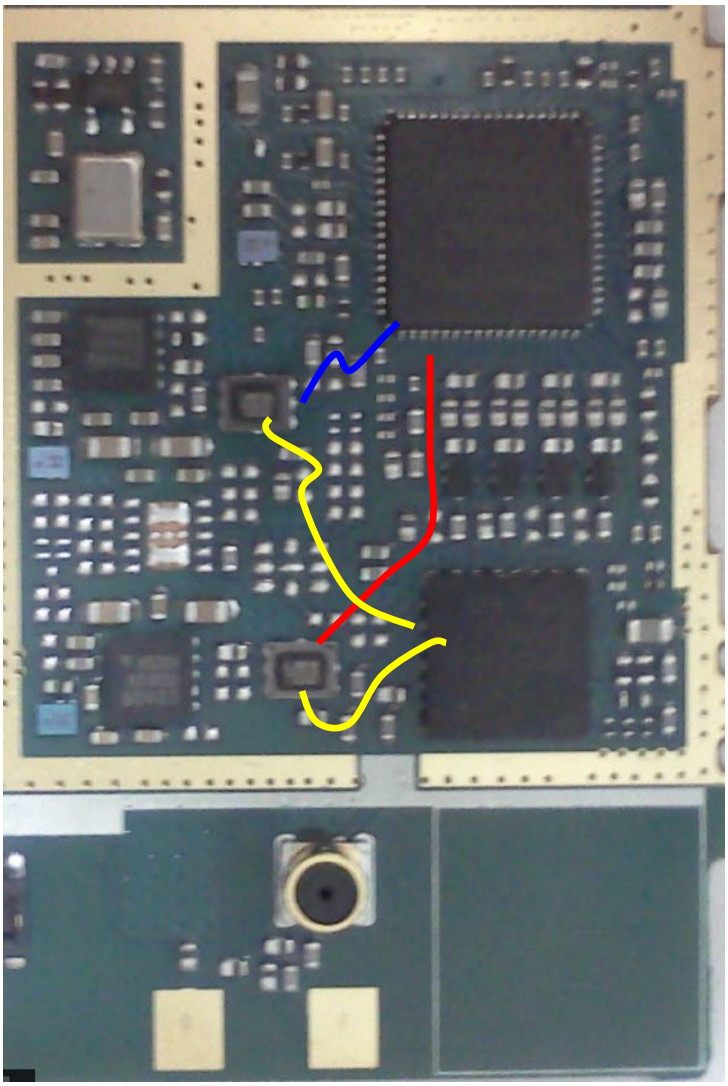

WCDMA BAND I and VIII RX Signal PATH

D1. WCDMA 2100 RX PATH

E1. WCDMA 900 RX PATH

F1. COMMON TX/RX PATH

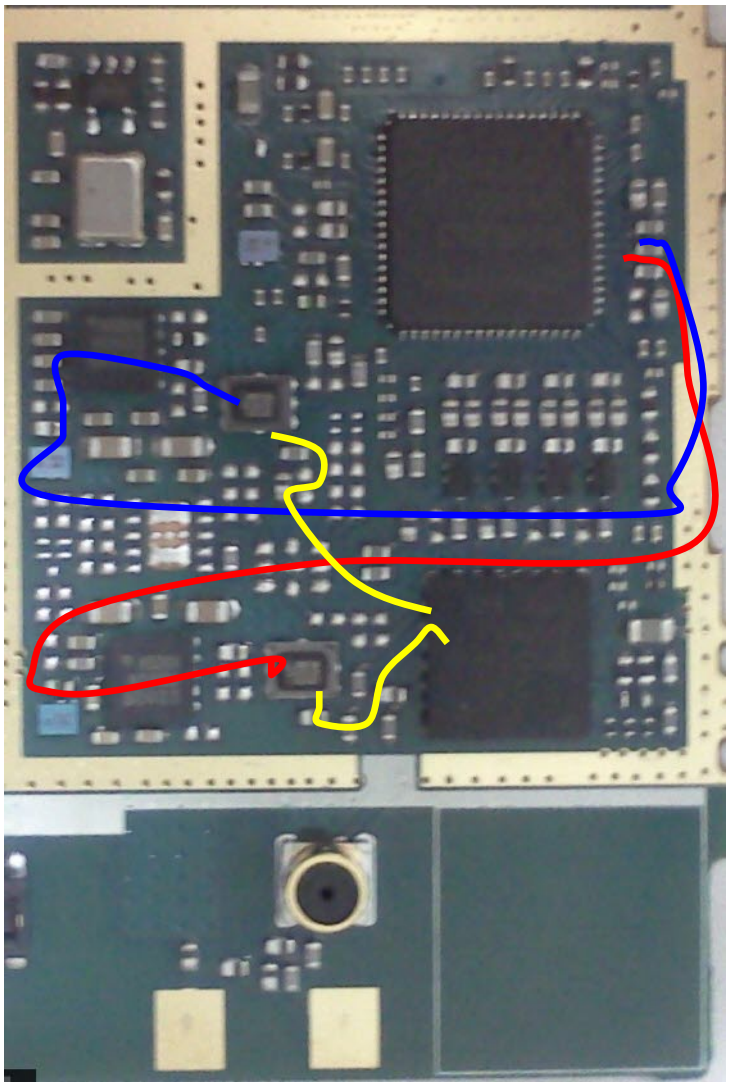

WCDMA I,II and VIII Band TX Signal PATH

D2. WCDMA 2100 TX PATH

E2. WCDMA 900 TX PATH

F1. COMMON TX/RX PATH

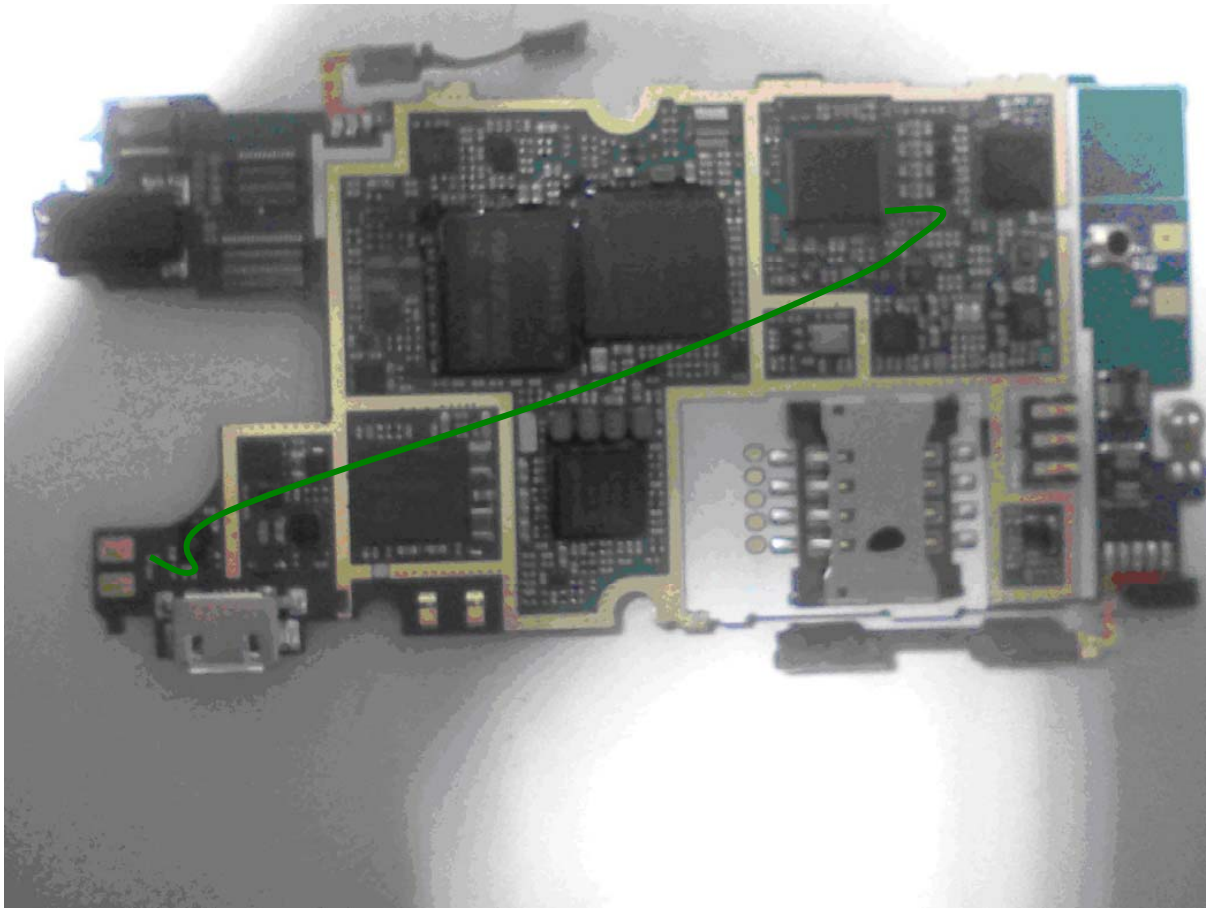

GPS Signal PATH

F. GPS Rx PATH

4.3 Checking TCXO Block

The output frequency (19.2MHz) of TCXO (X101) is used as the reference one of RTR6285 and PM7540 internal VCO.

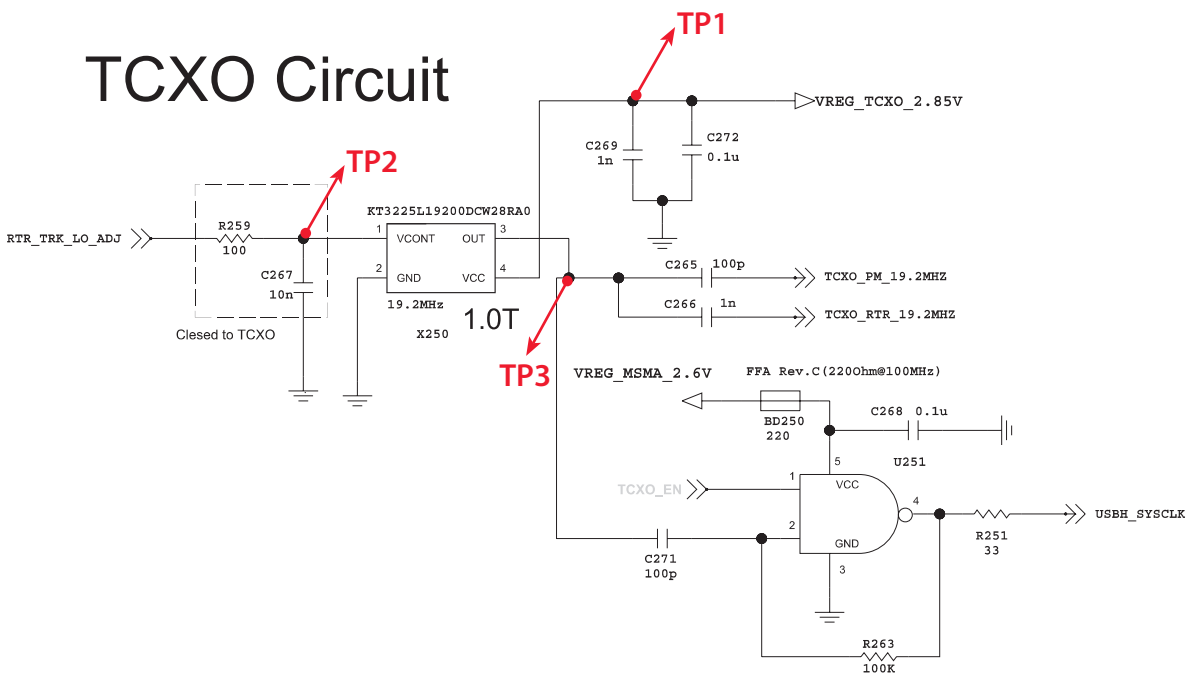

Schematic of the Crystal Part (19.2MHz)

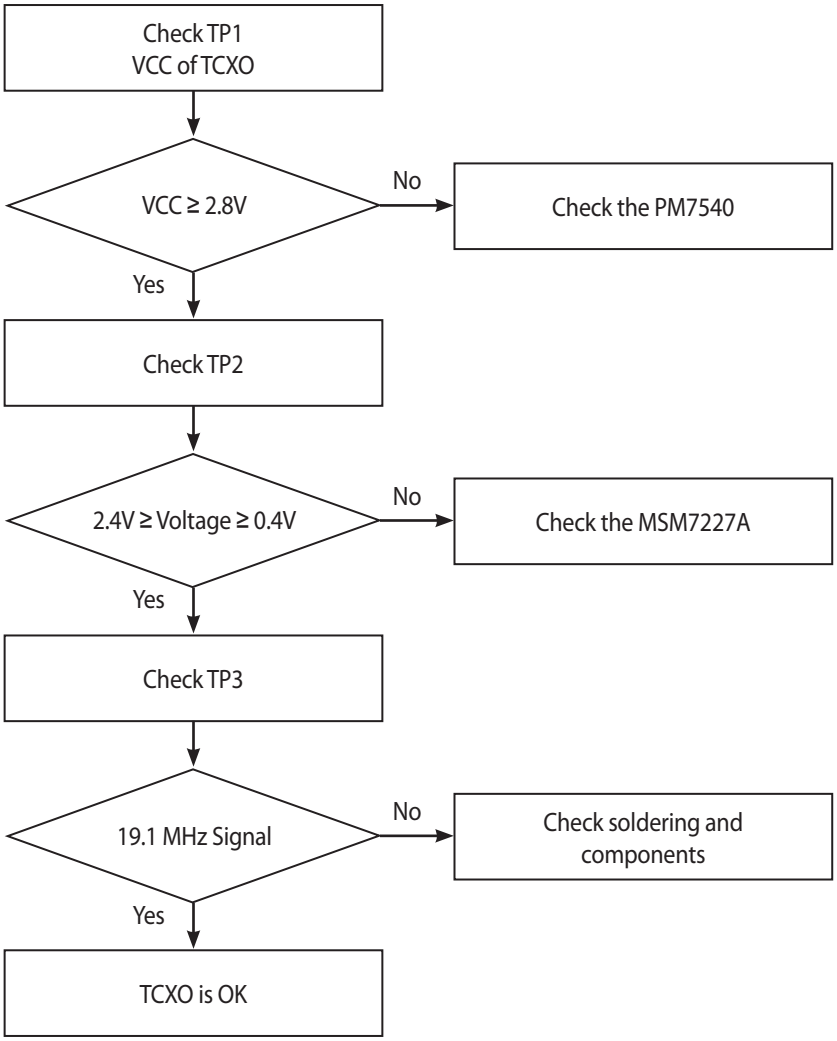

4.4 Checking GSM TX Module(GSM PAM+FEM) BLOCK

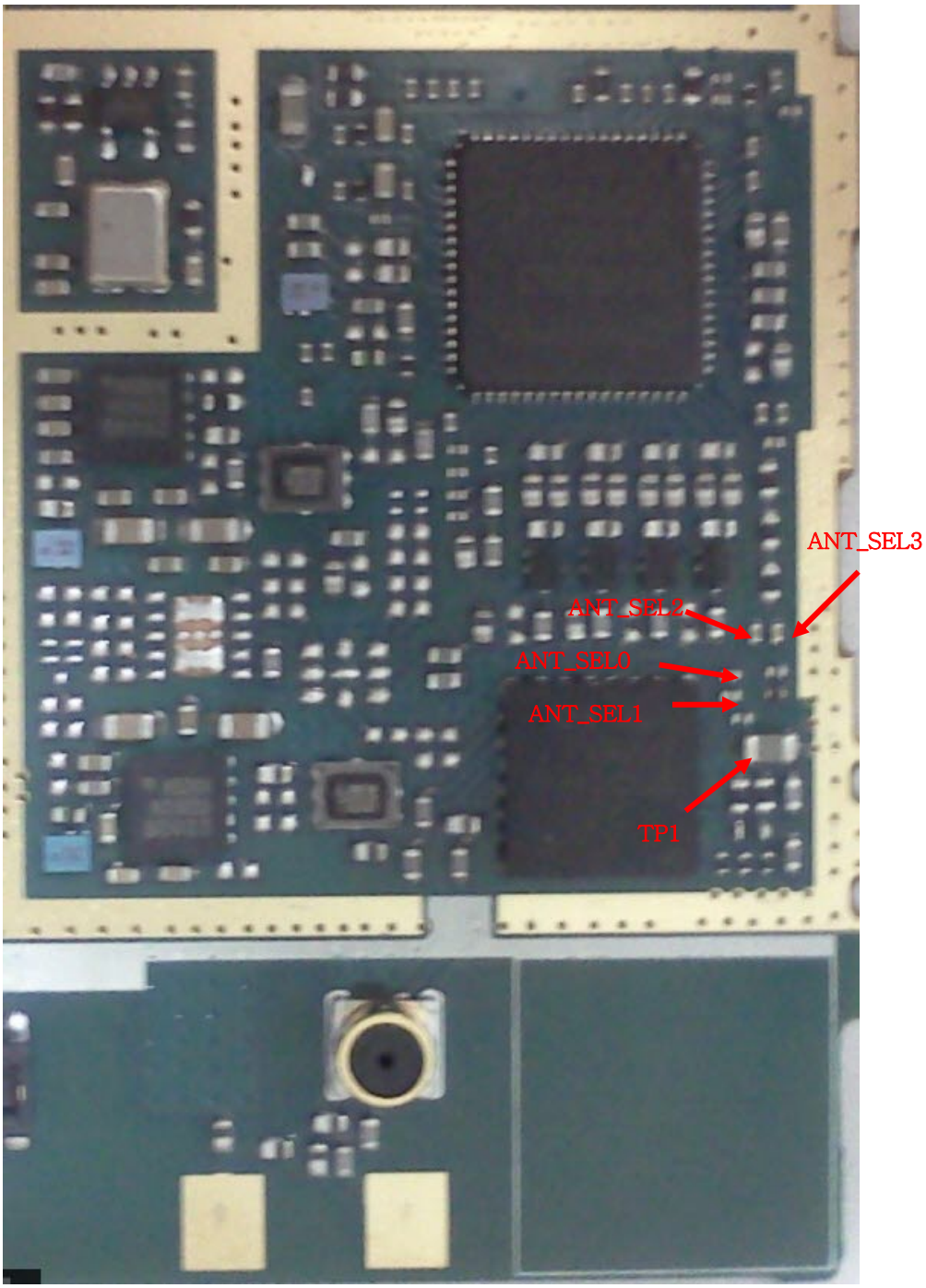

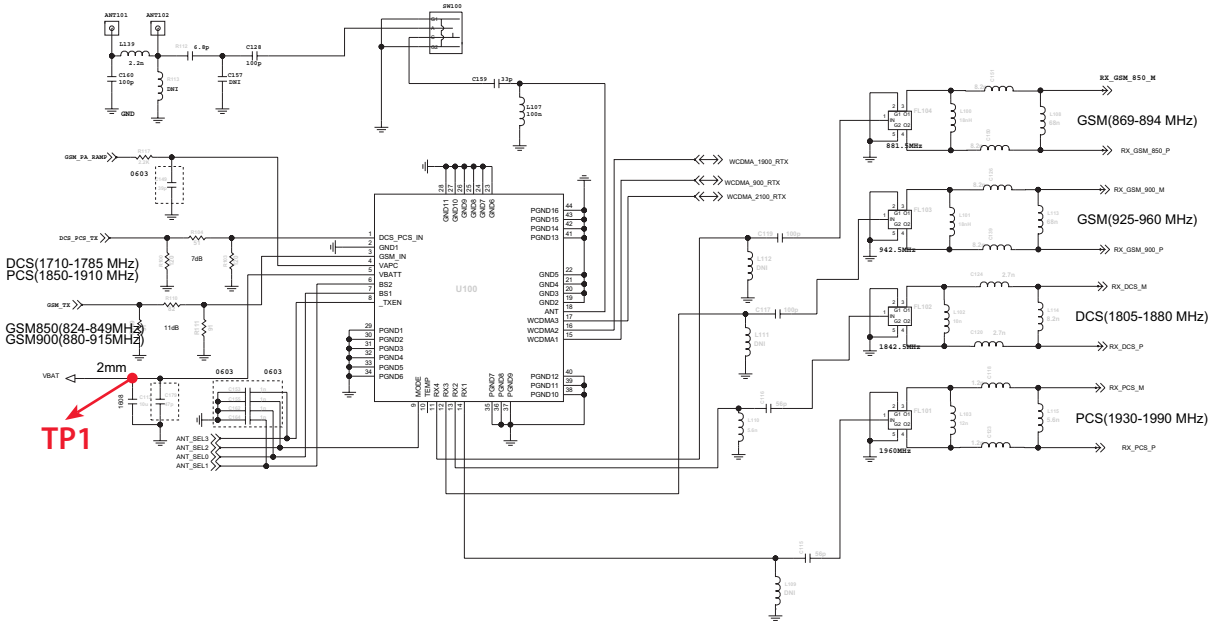

ANTENNA SWITCH MODULE LOGIC(SKY77544)

	ANT_SEL0	ANT_SEL1	ANT_SEL2	ANT_SEL3
GSM850/GSM900 TX	LOW	HIGH	LOW	LOW
DCS1800/PCS1900 TX	HIGH	HIGH	LOW	LOW
PCS1900 RX	LOW	LOW	LOW (X)	HIGH
DCS1800 RX	LOW	HIGH	LOW (X)	HIGH
GSM900 RX	HIGH	HIGH	LOW (X)	HIGH
GSM850 RX	HIGH	LOW	LOW (X)	HIGH
W900 (W850)	HIGH	LOW	LOW	LOW
W1900	LOW	LOW	HIGH	LOW
W2100	HIGH	LOW	HIGH	LOW

Checking Switch Block Power Source

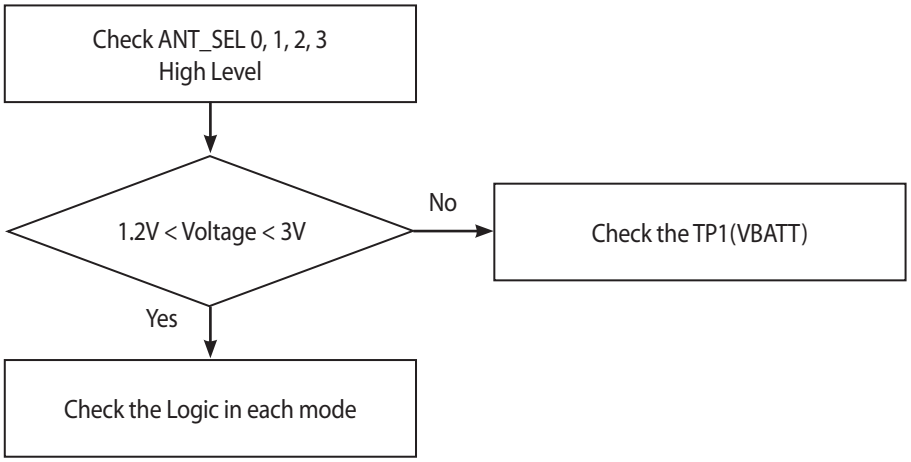

Check the Logic In each mode

4.5 Checking WCDMA Block

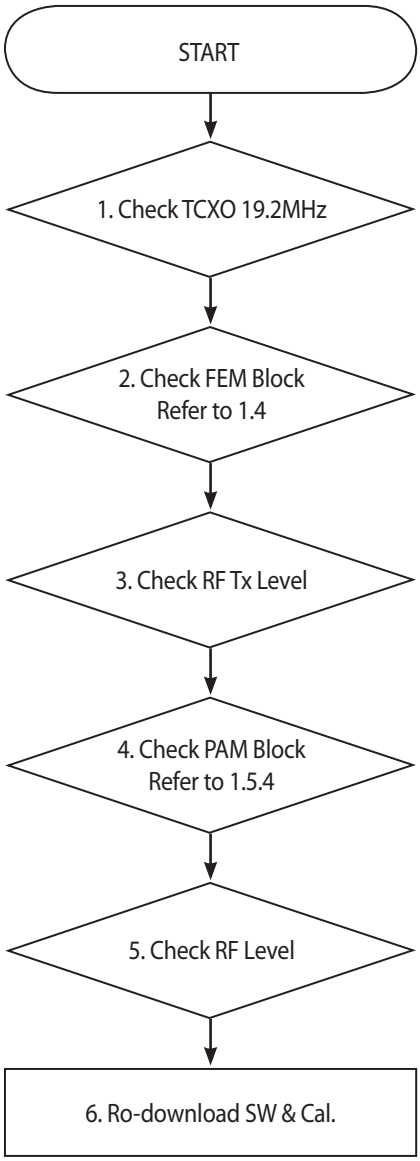

4.5.1 GSM Quad-Band PAM (U100: SKY77544)

The module consists of a GSM850/900 PA and DCS1800/PCS1900 PA block, impedance-matching circuitry for 50 Ω input and output impedances, Tx harmonic filtering, high linearity-low insertion loss switches, and a CMOS Power Amplifier Control (PAC) block. A custom silicon integrated circuit contains decoder circuitry to control the RF switch while providing a low current external control interface. An integrated temperature sensor provides an analog voltage based on the temperature of the module.

Applications

• Quad-band cellular handsets encompassing -Class 4 GSM850/900 -Class 1 DCS1800 PCS1900 -Class 12 GPRS multi-slot operation -EDGE polar modulation -Triple band WCDMA antenna switch support

Features

Small outline: 6 mm x 6 mm

Very low profile: 0.9 mm

28-pad package

Low input power range -0 to 6 dBm

High efficiency -GSM850 41% -GSM900 41% -DCS 38% -PCS 38%

Tx-VCO-to-antenna and antenna-to-Rx-SAW filter RF interface

Tx harmonics below -38 dBm

Wideband envelope control path

Input/Output matching 50 Ω internal

Low APC current 20 µA

High impedance control inputs 15 µA, typical

Integrated module temperature sensor

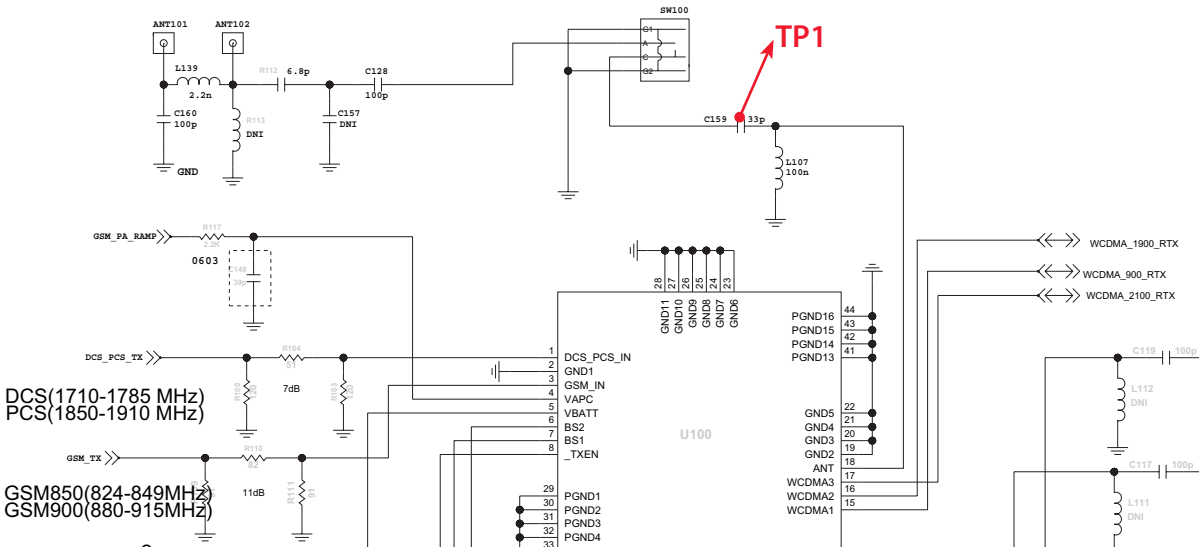

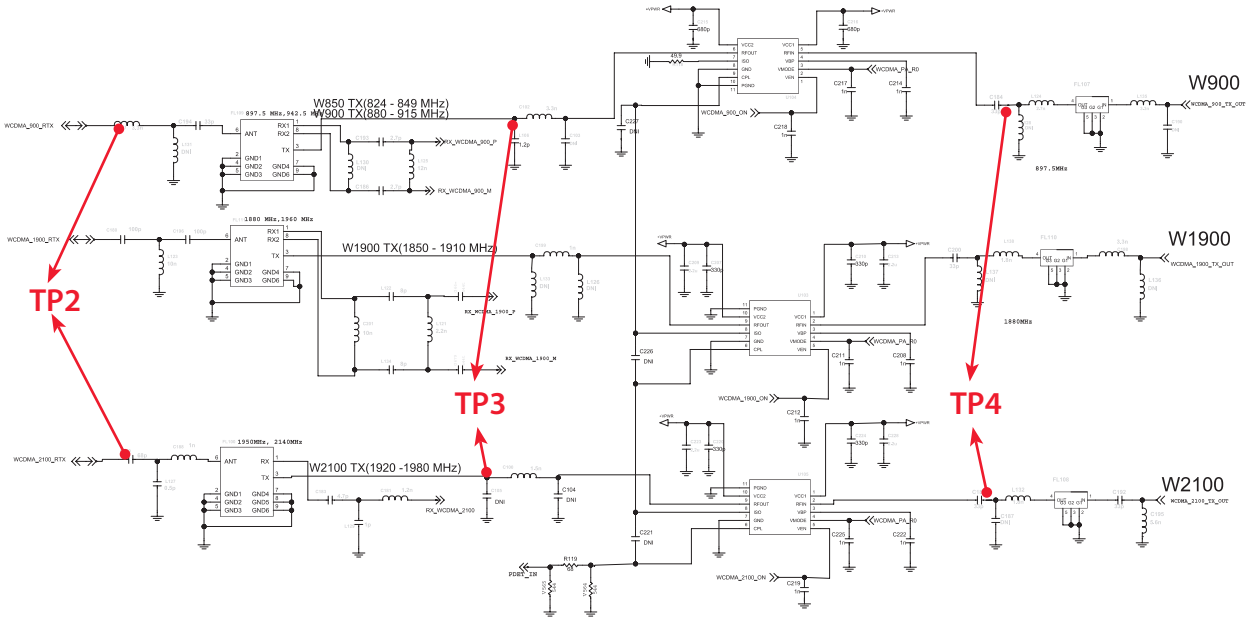

For testing, Max power output is needed

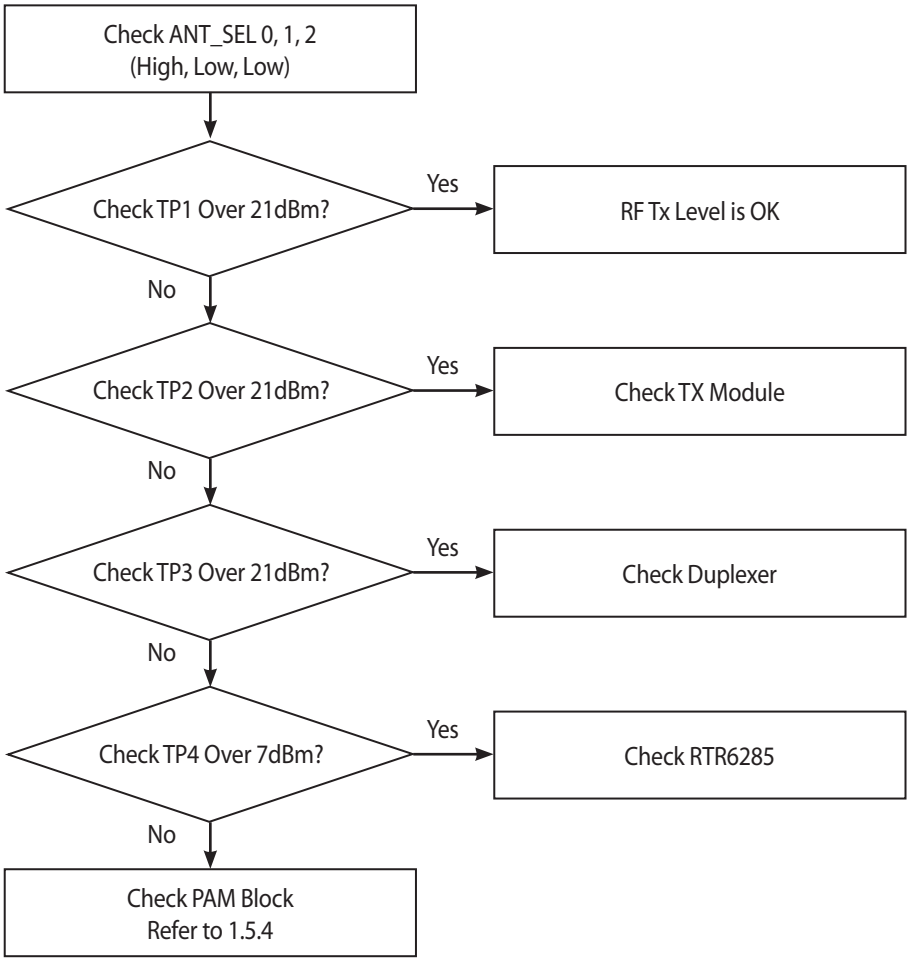

4.5.2. Checking PAM Block

PAM control signal

WCDMA_PA_R0 (WCDMA_900_ON(C218), WCDMA_2100_ON(C219) and) : PAM Enable

W_PA_RO: PAM Gain Control

W_PA_ON must be HIGH (over 2.6V)

PAM IN/OUT Signal :

When PAM is under the operation of high power mode (WCDMA_PA_R0(C142):Low),

PAM OUT power must be over 21 dBm PAM IN power must be under 10 dBm

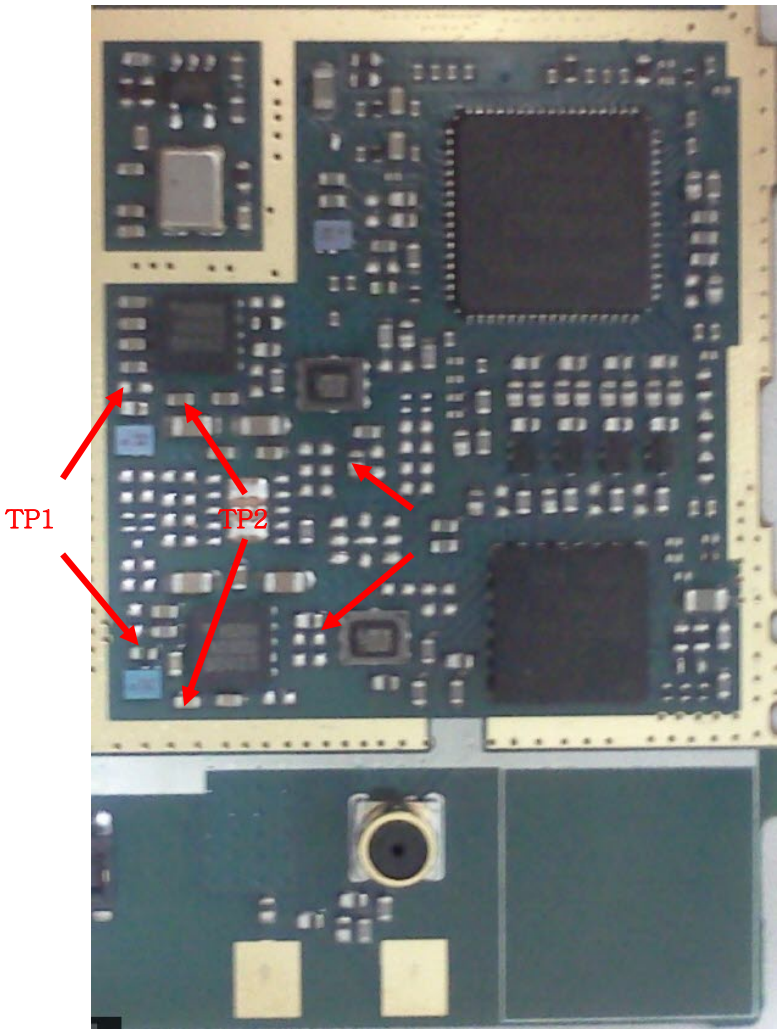

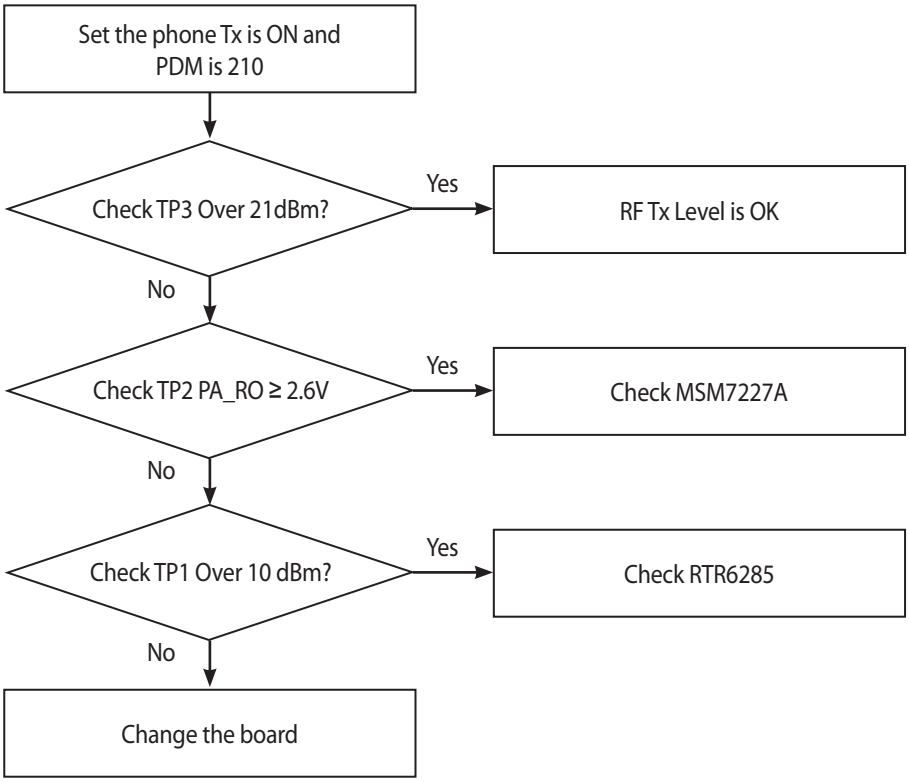

4.5.3. Checking RF Rx Level

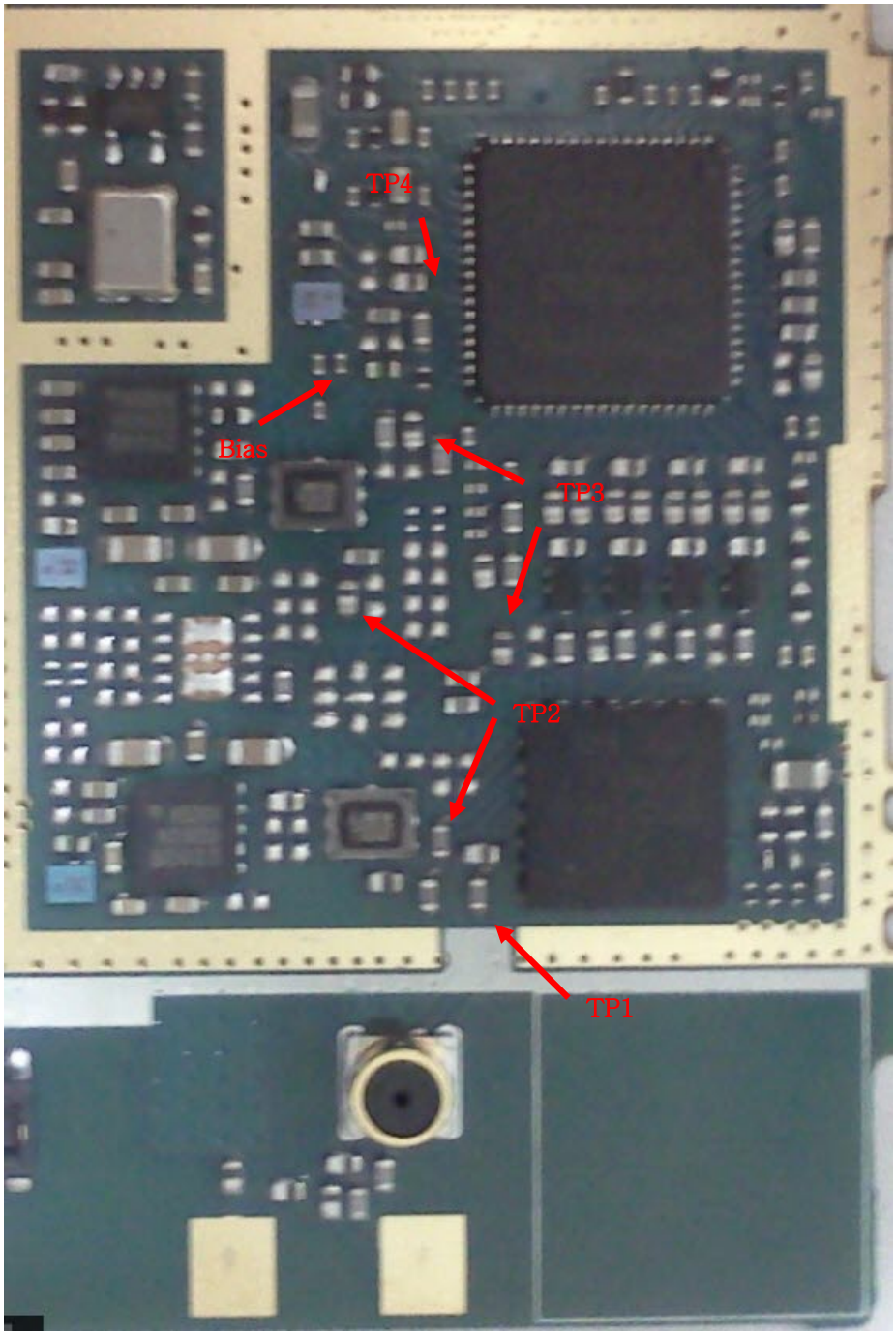

Test Point (RF Rx Level)

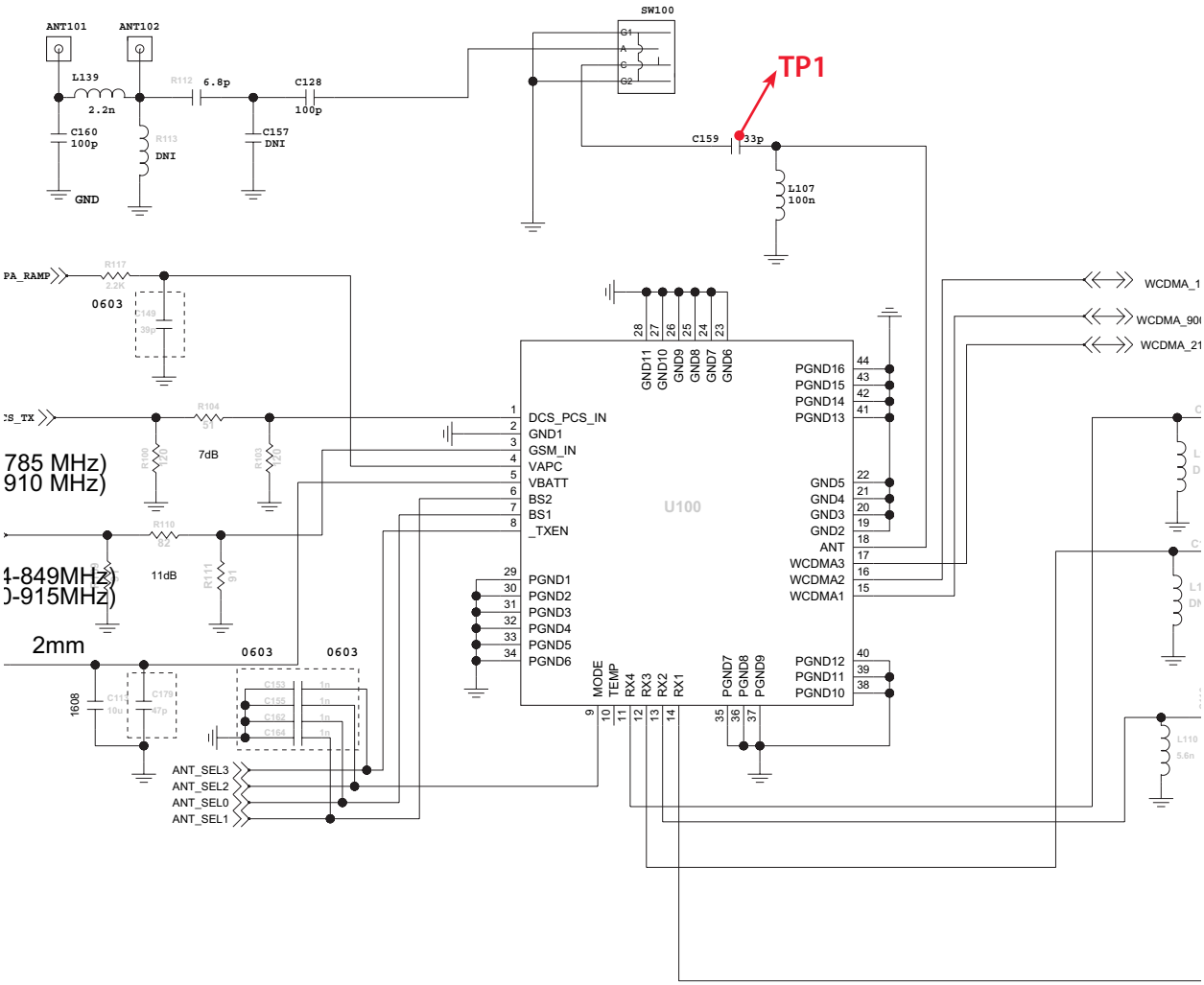

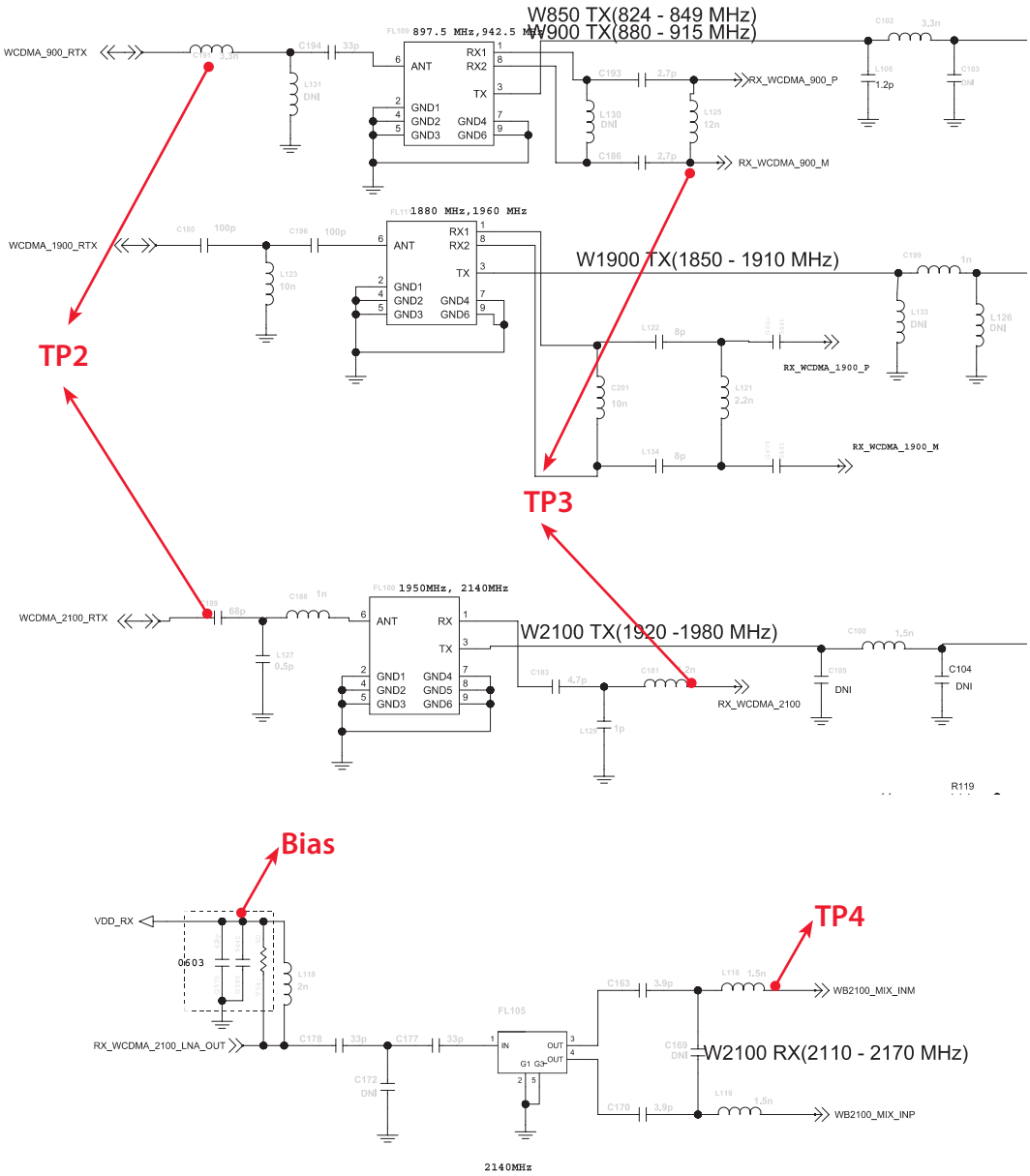

WCDMA RX 2100 LNA Circuit

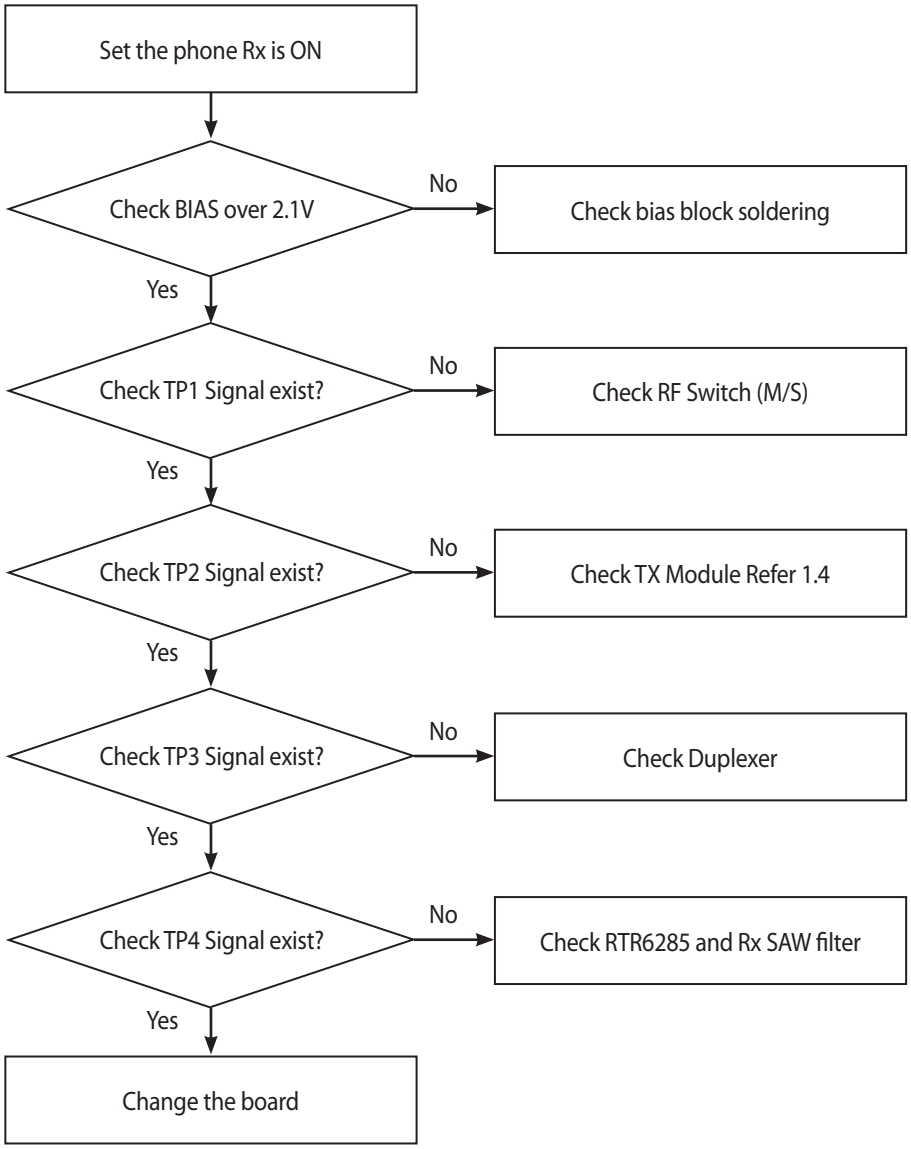

4.6. Checking GSM BLOCK

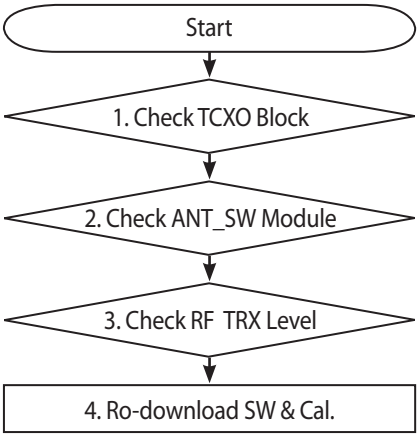

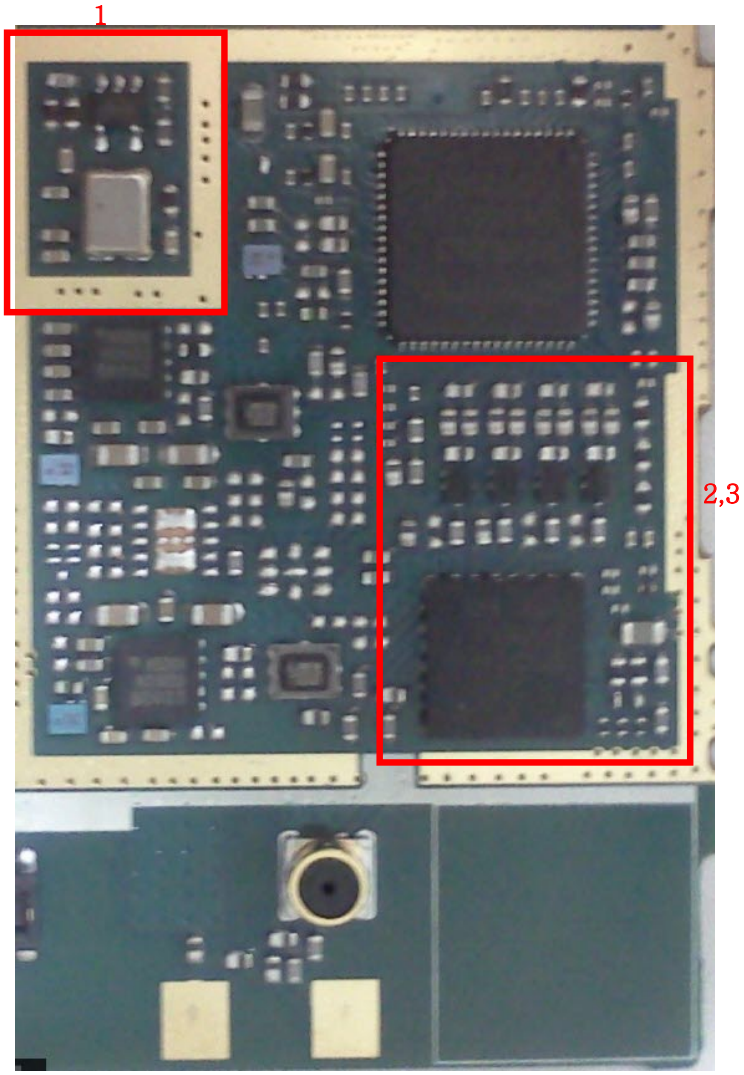

4.6.1. Checking TCXO Block

Refer to 4.3

4.6.2. Checking FEM Block

Refer to 4.4

4.6.3. Checking RF TX level

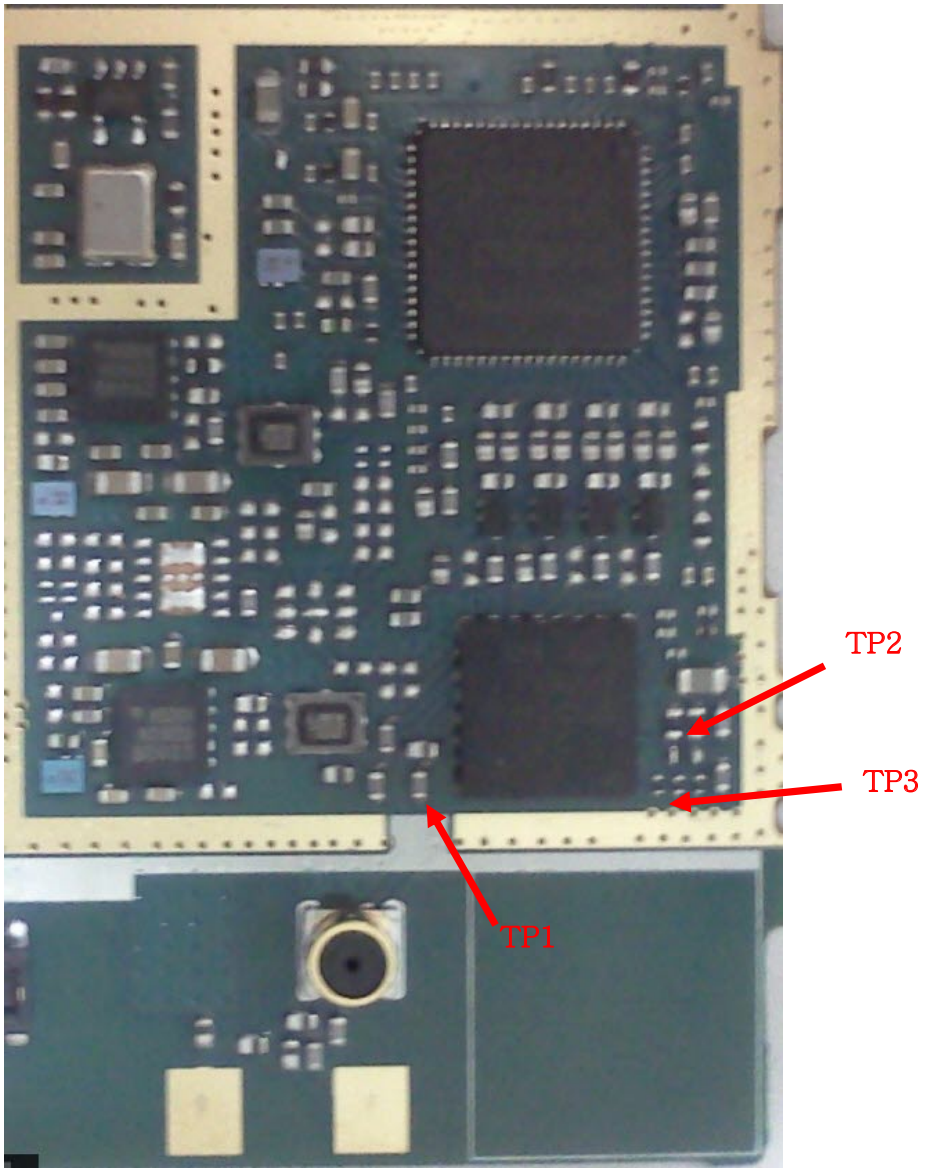

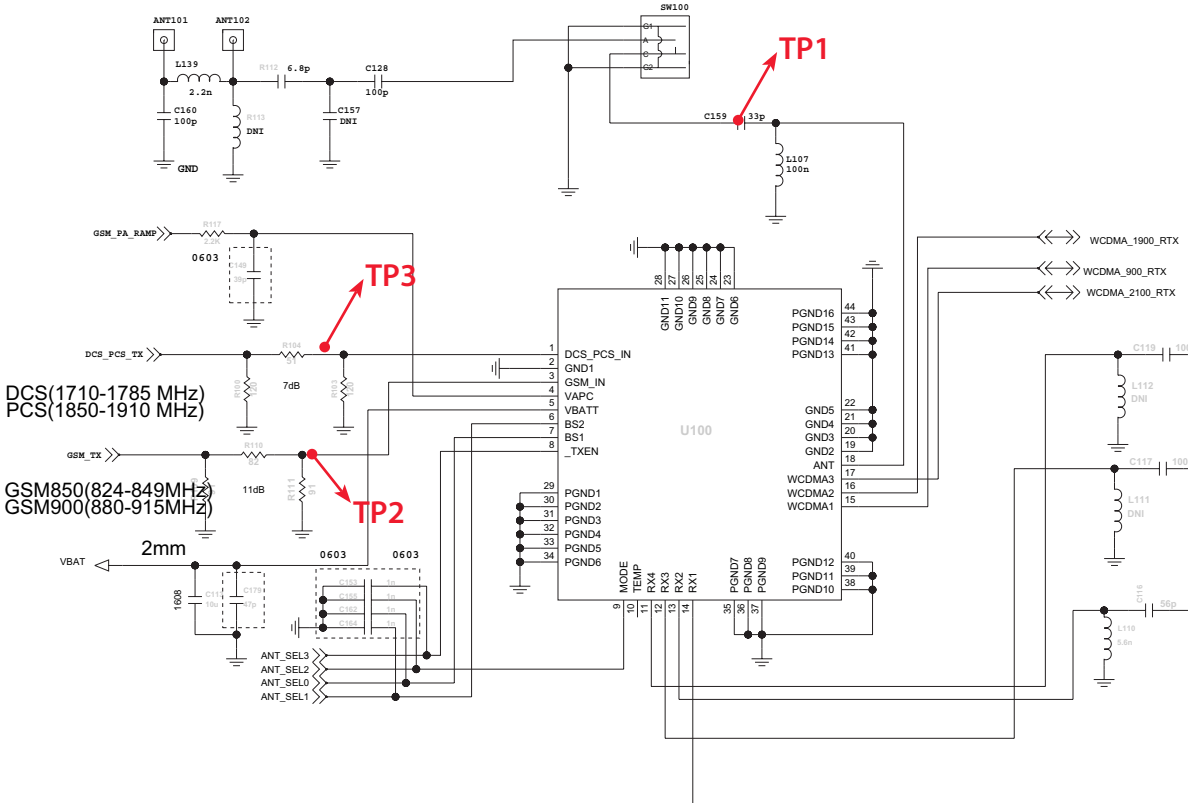

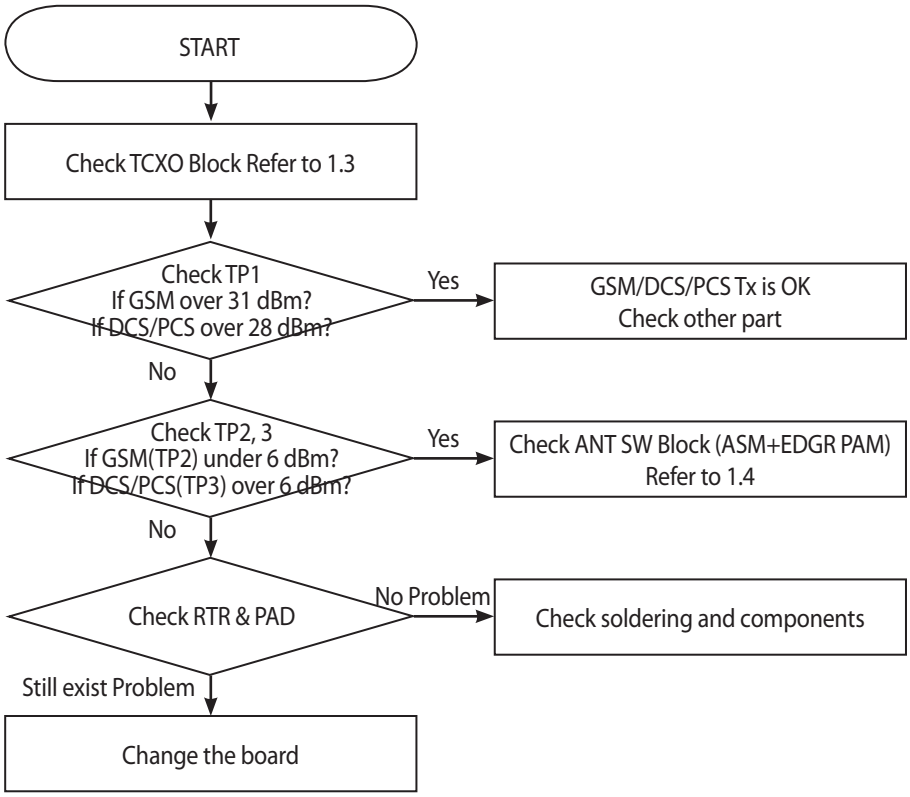

4.6.4 Checking RF RX BLOCK

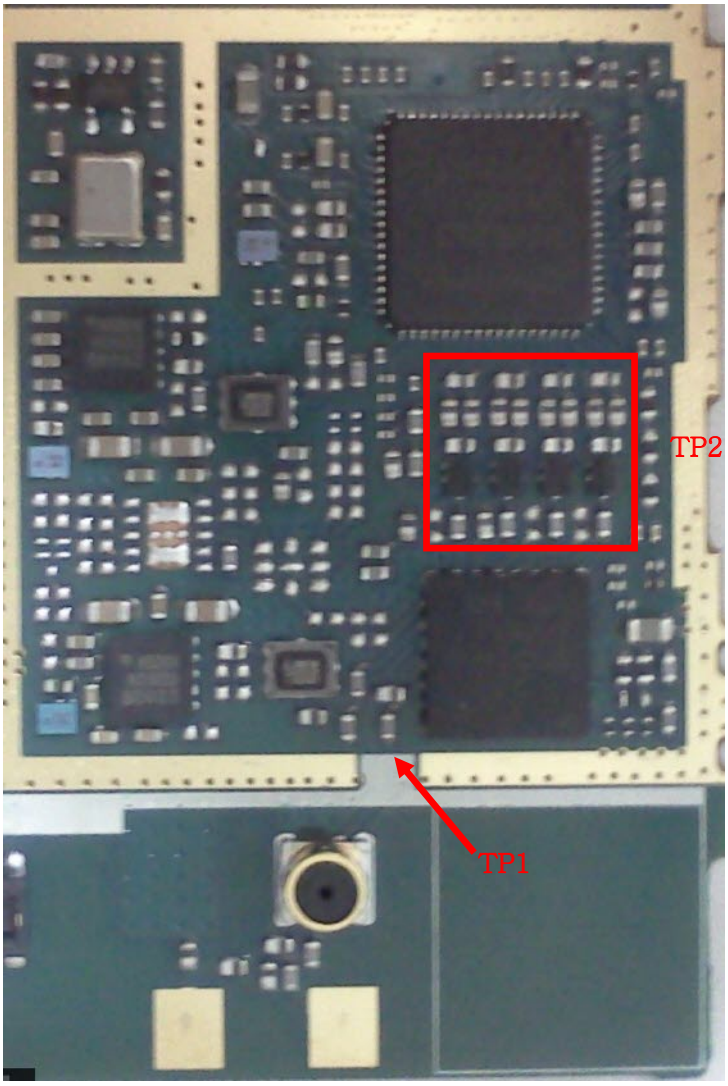

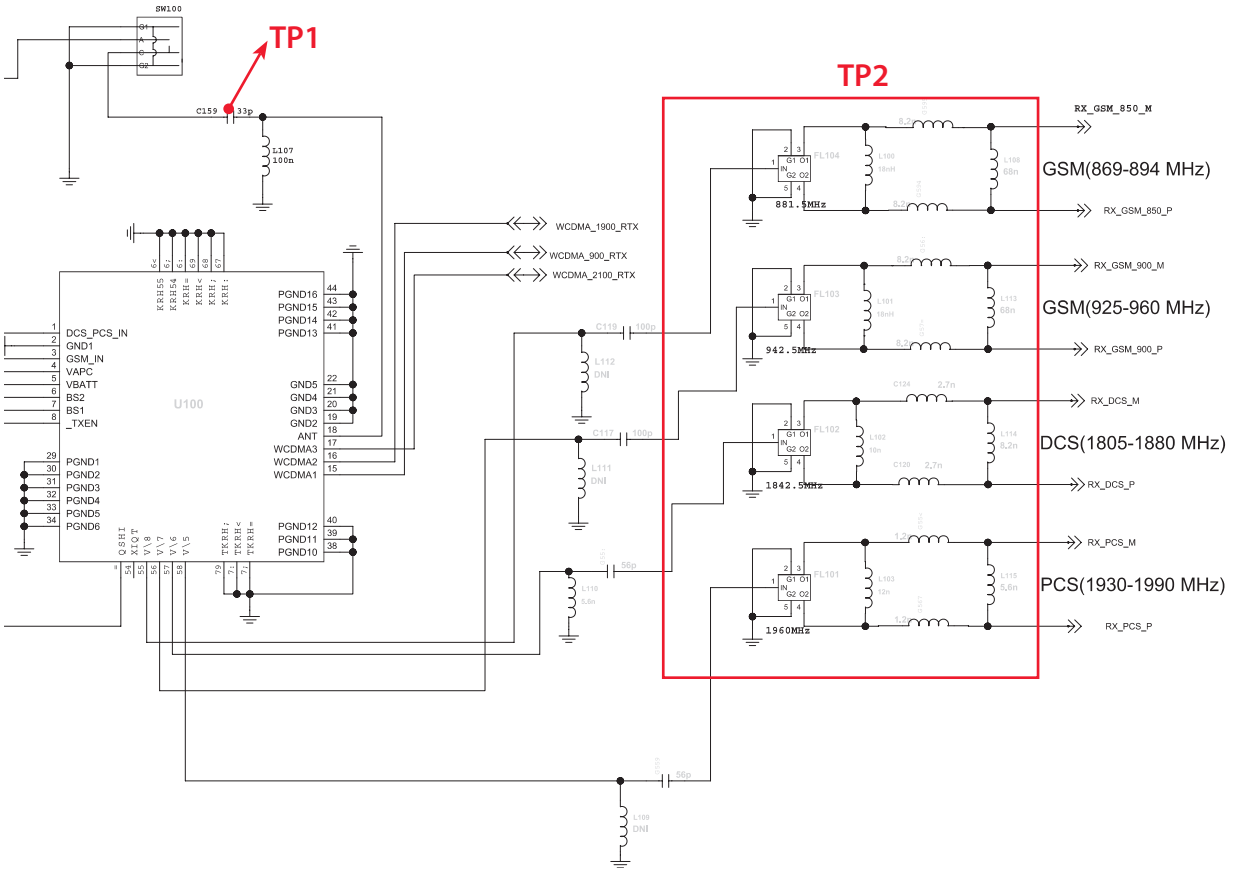

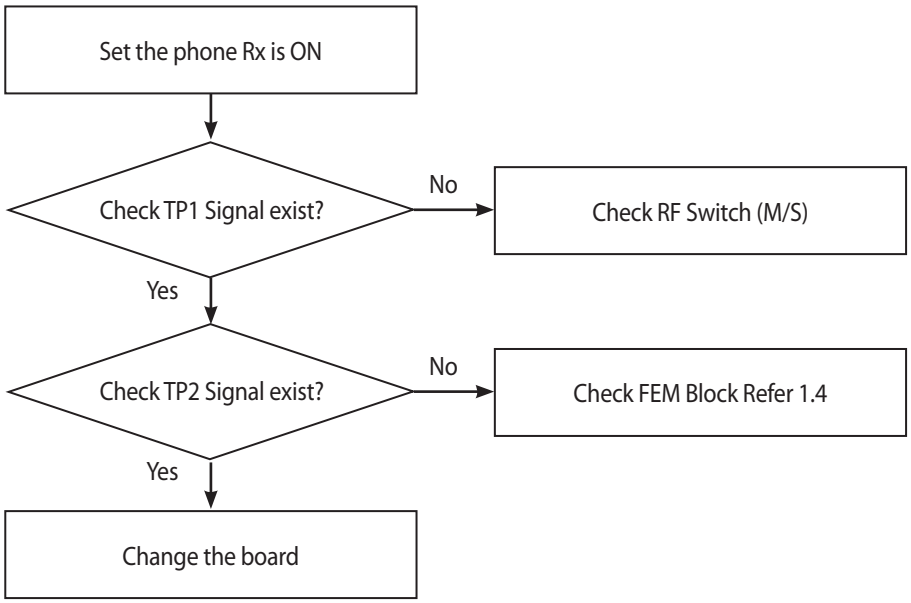

4.7 GPS/WIFI/BT RF COMPONENTS

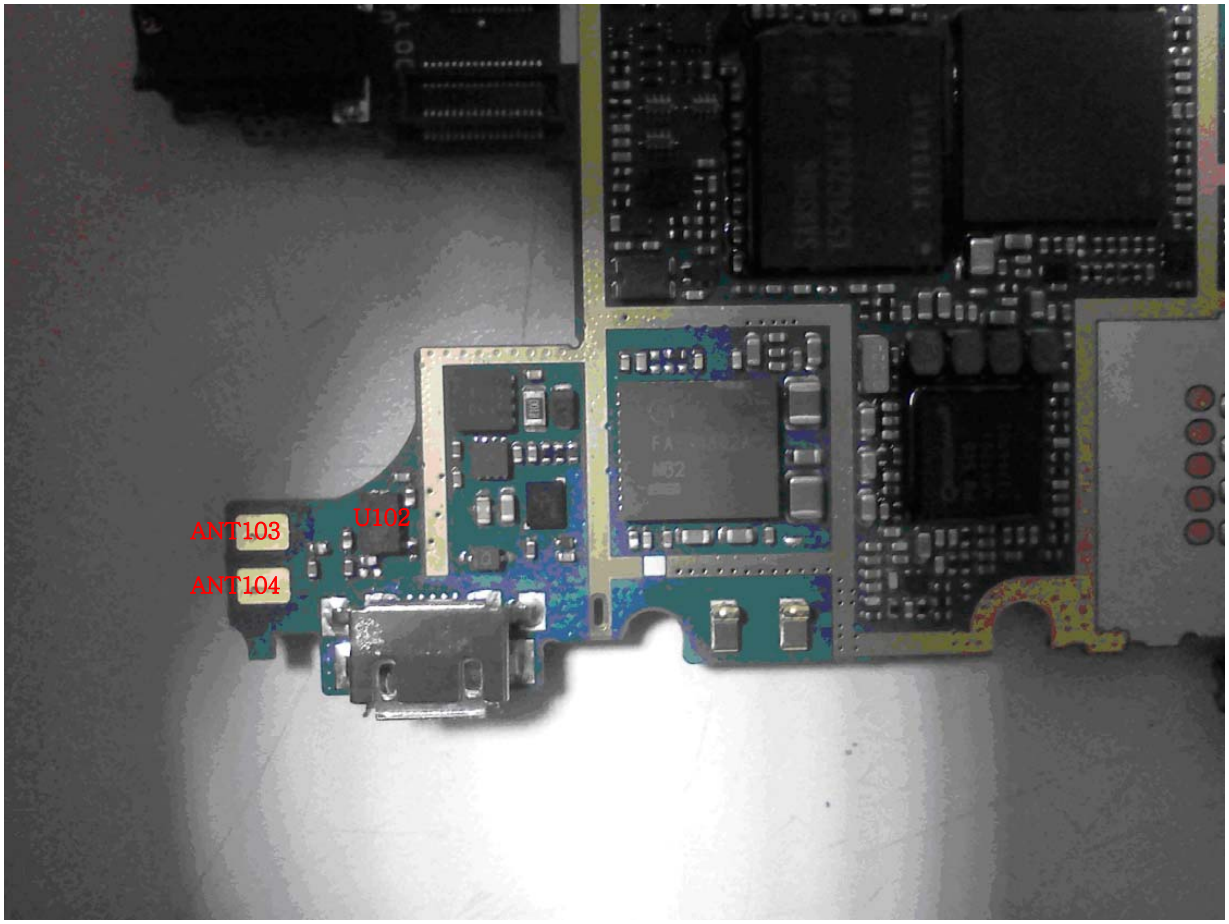

Reference	Description
ANT103	ANT PAD
ANT104	GND PAD
U102	GPS LNA

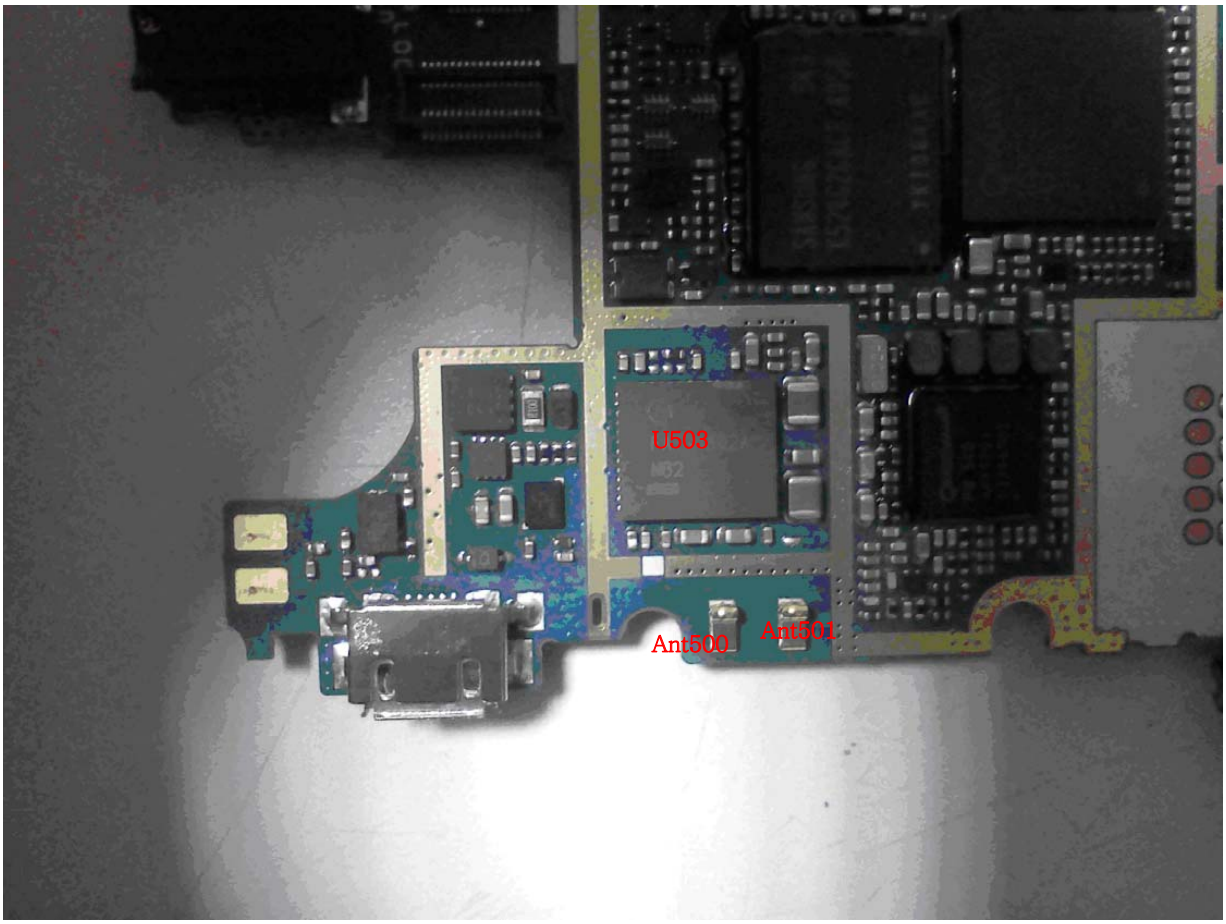

Reference	Description
ANT500	ANT PAD
ANT501	GND PAD
U503	BT/WIFI Module

4.8 GPS/WIFI/BT Trouble shooting

4.8.1 A-GPS Block

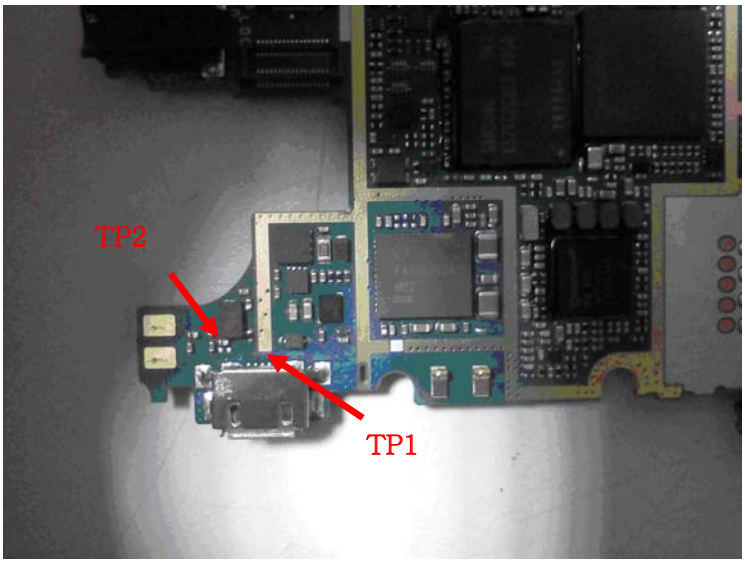

LNA for the GPS

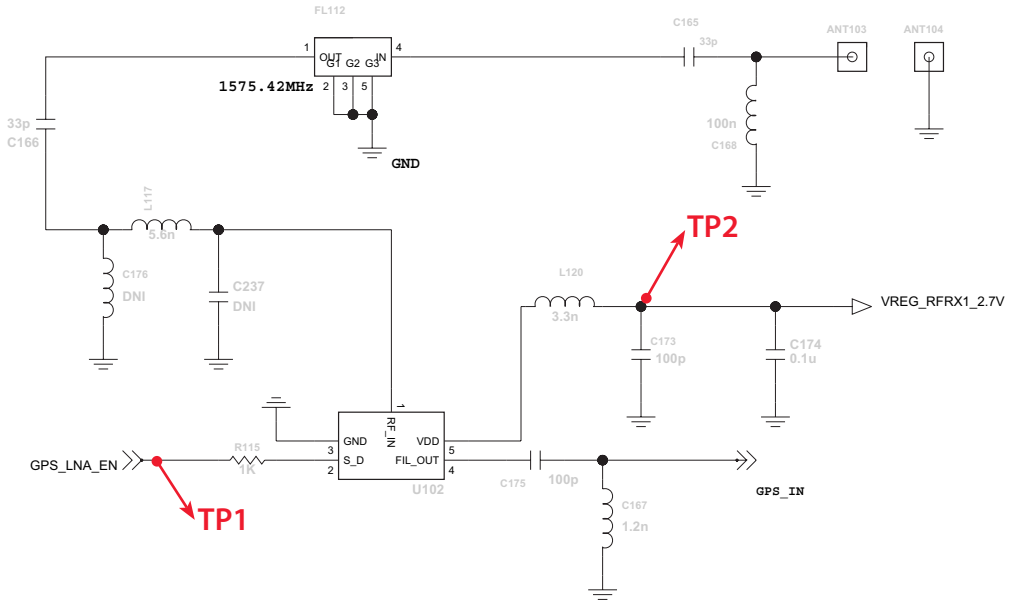

Schematic of the A-GPS block

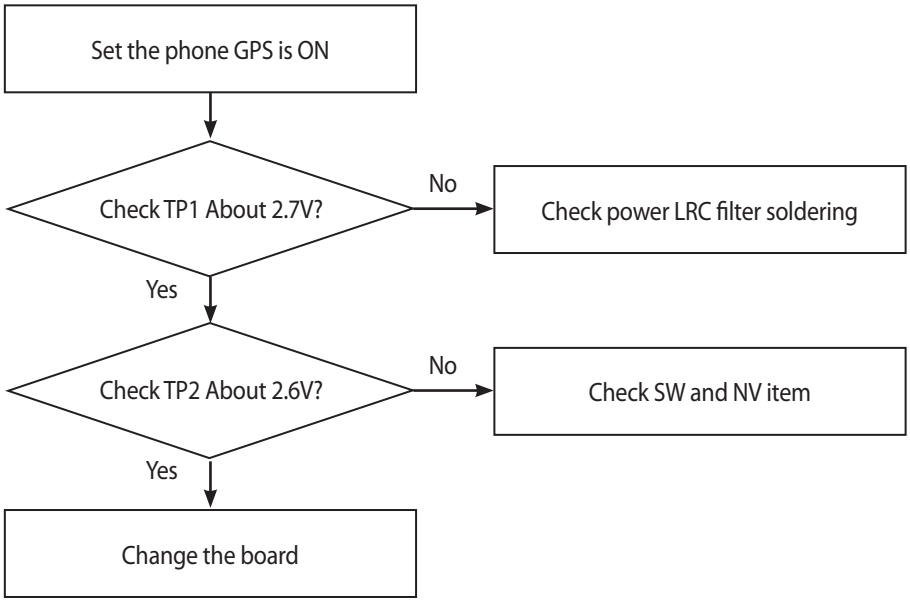

4.9.2 WLAN/BT/FM Block

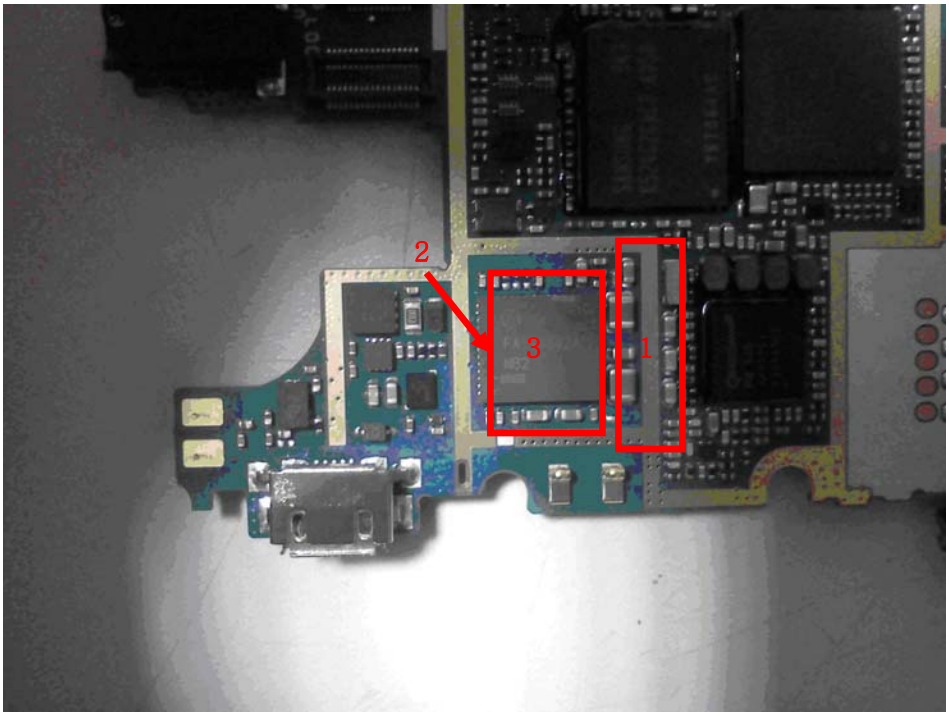

4. Trouble Shooting

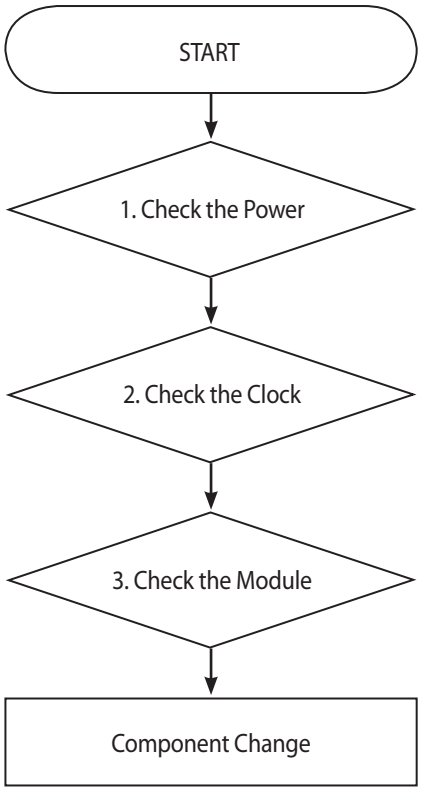

4.9 Power ON Troubleshooting

Power On sequence of GT540 is :
Power key press → KPD_PWR_N(VA20) go to low→ PM7540 Power Up → VREG_MSMC1_1.2V(C104), VREG_MSMC2_1.2V(C107), VREG_MSME_1.8V(C161), VREG_MSMP_2.7V(C106), VREG_MSMA_2.6V(C109), VREG_TCXO_2.85V(C218) power ON → Phone booting and PS_HOLD(D18) go to High

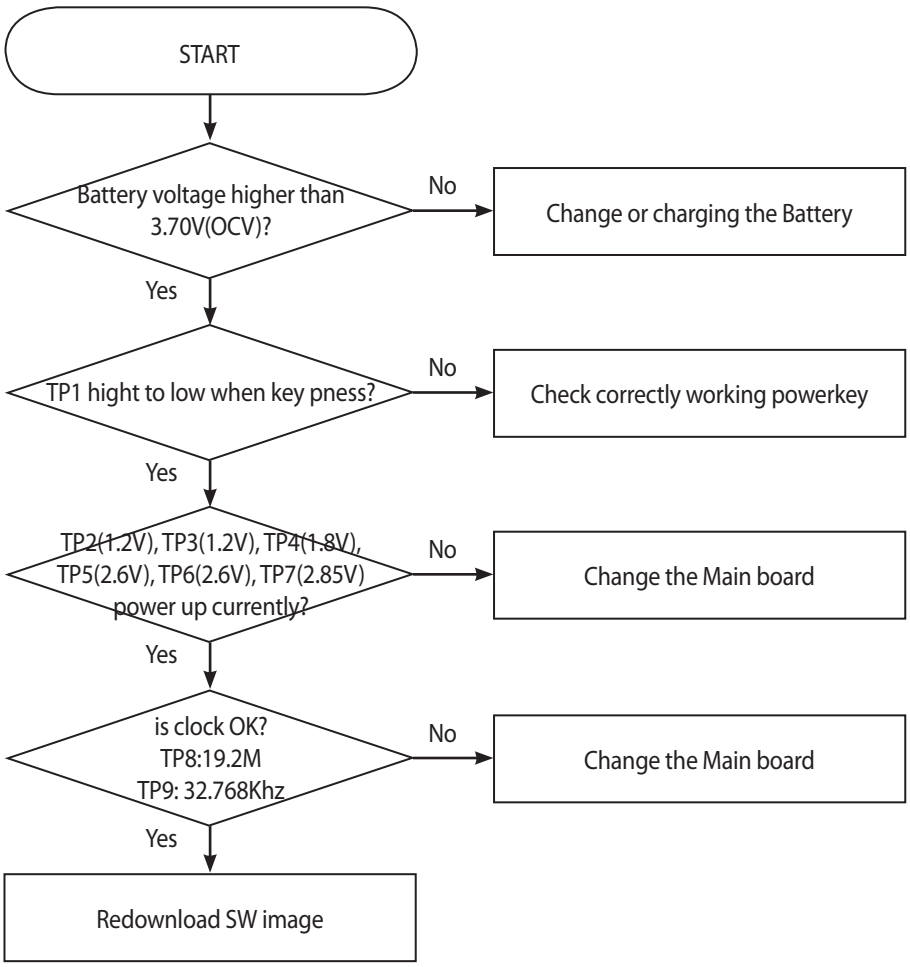

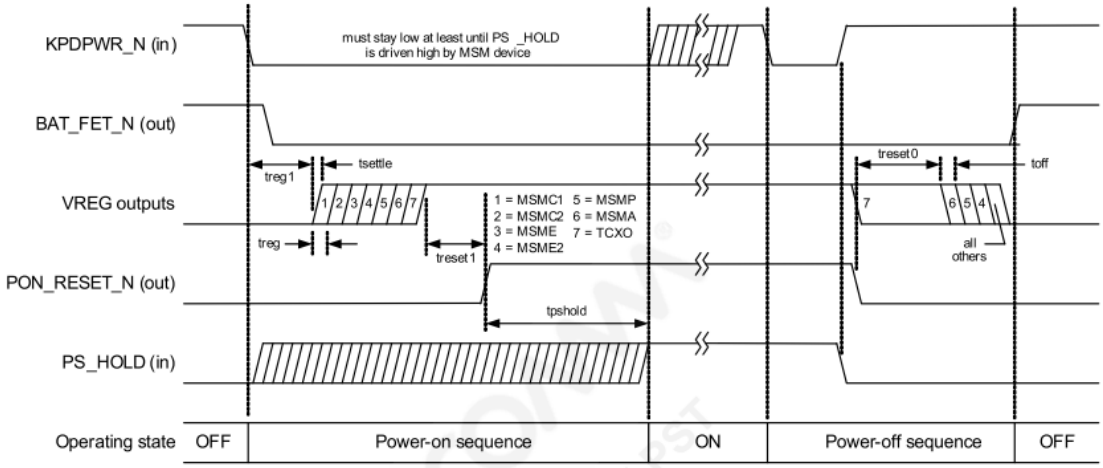

PM7540 Power sequence

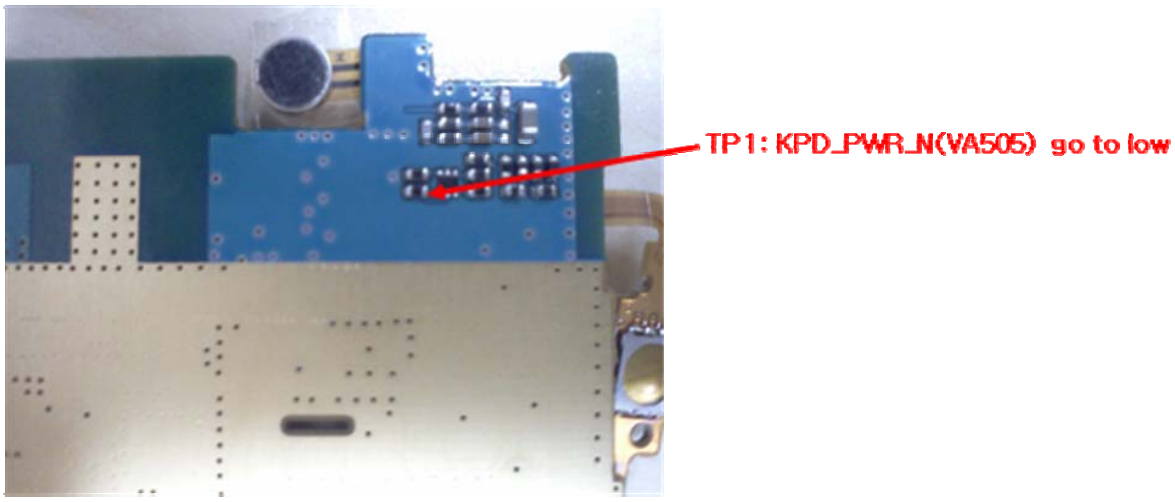

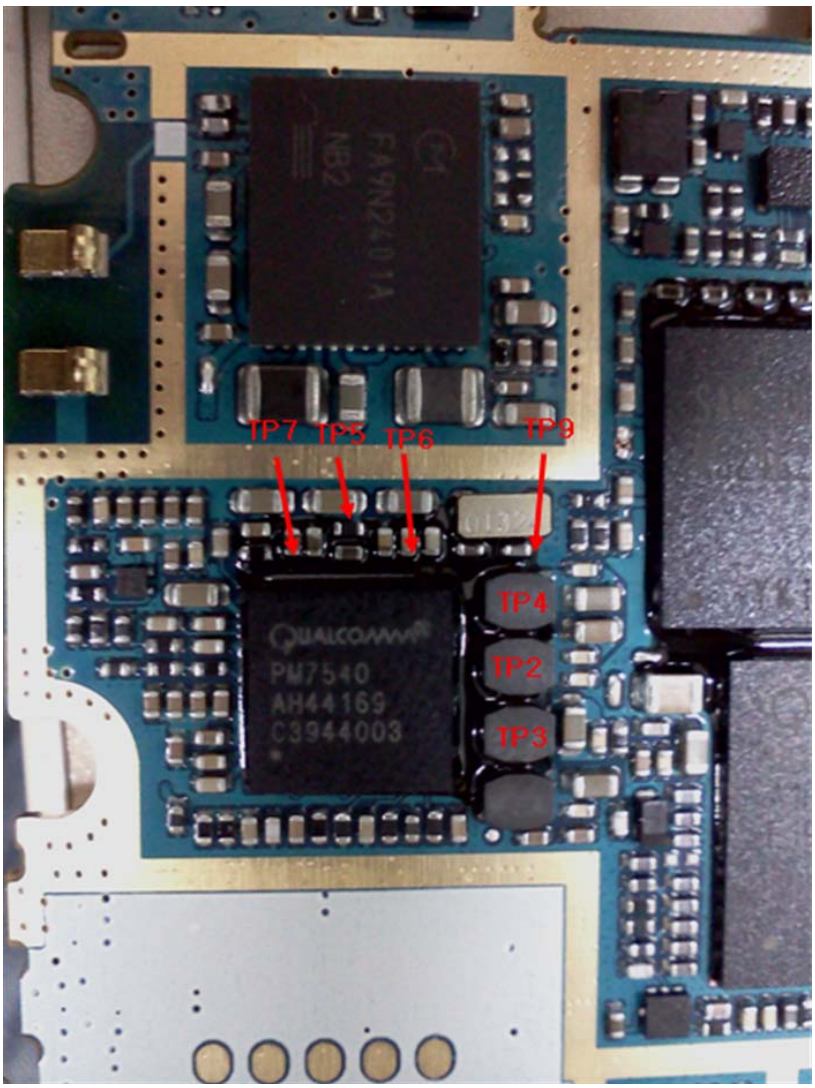

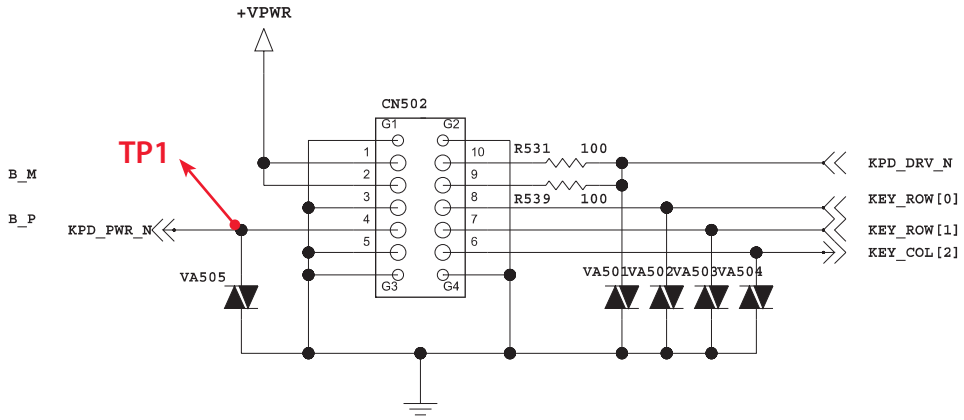

TCXO Circuit

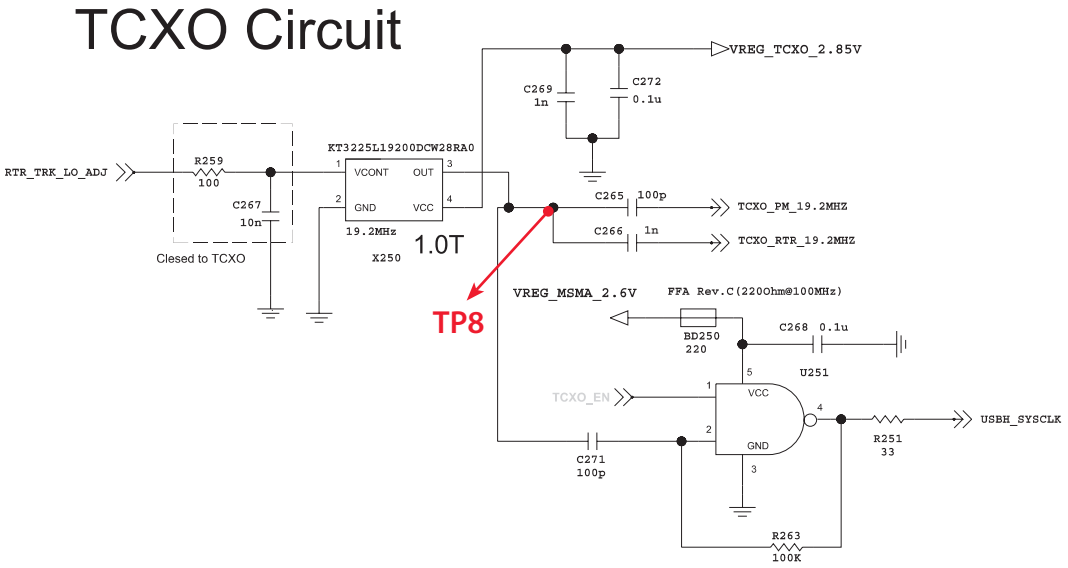

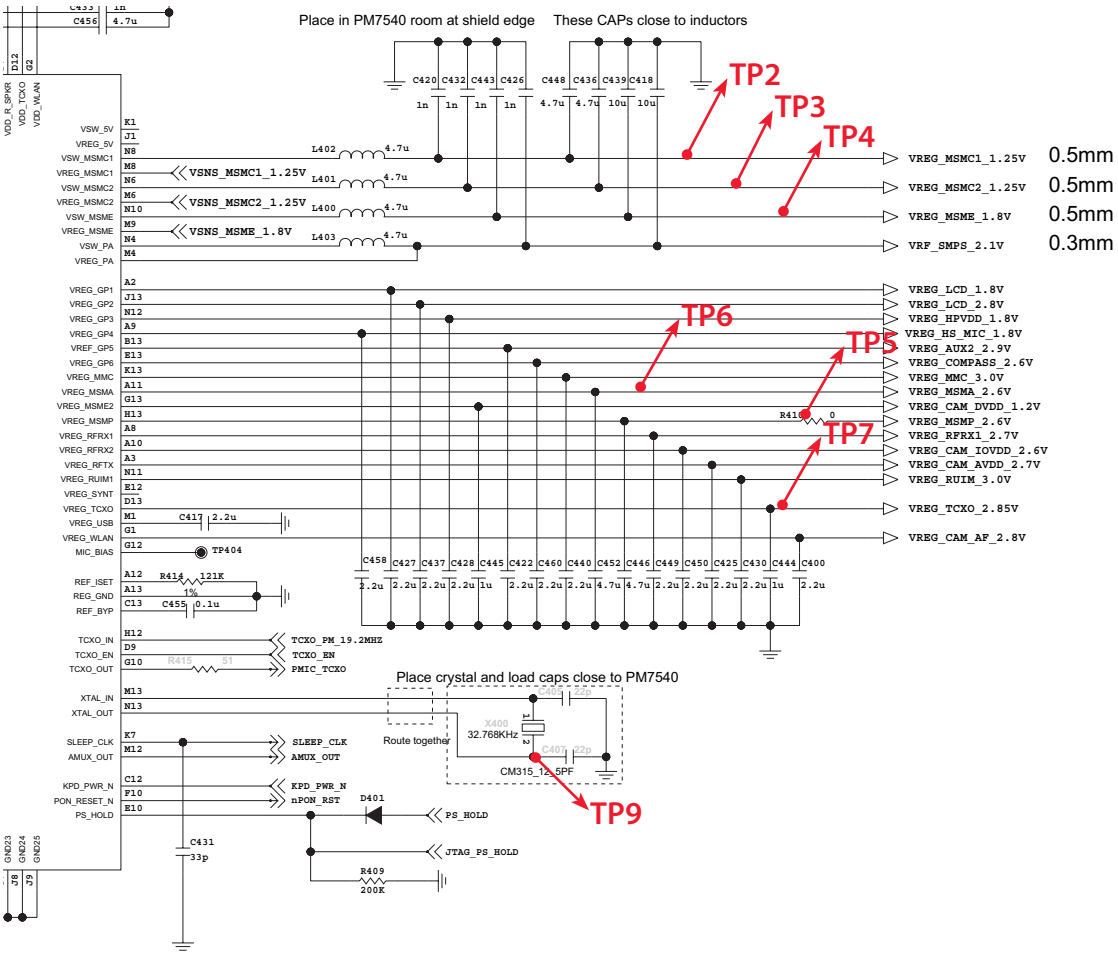

4.10 Charger Troubleshooting

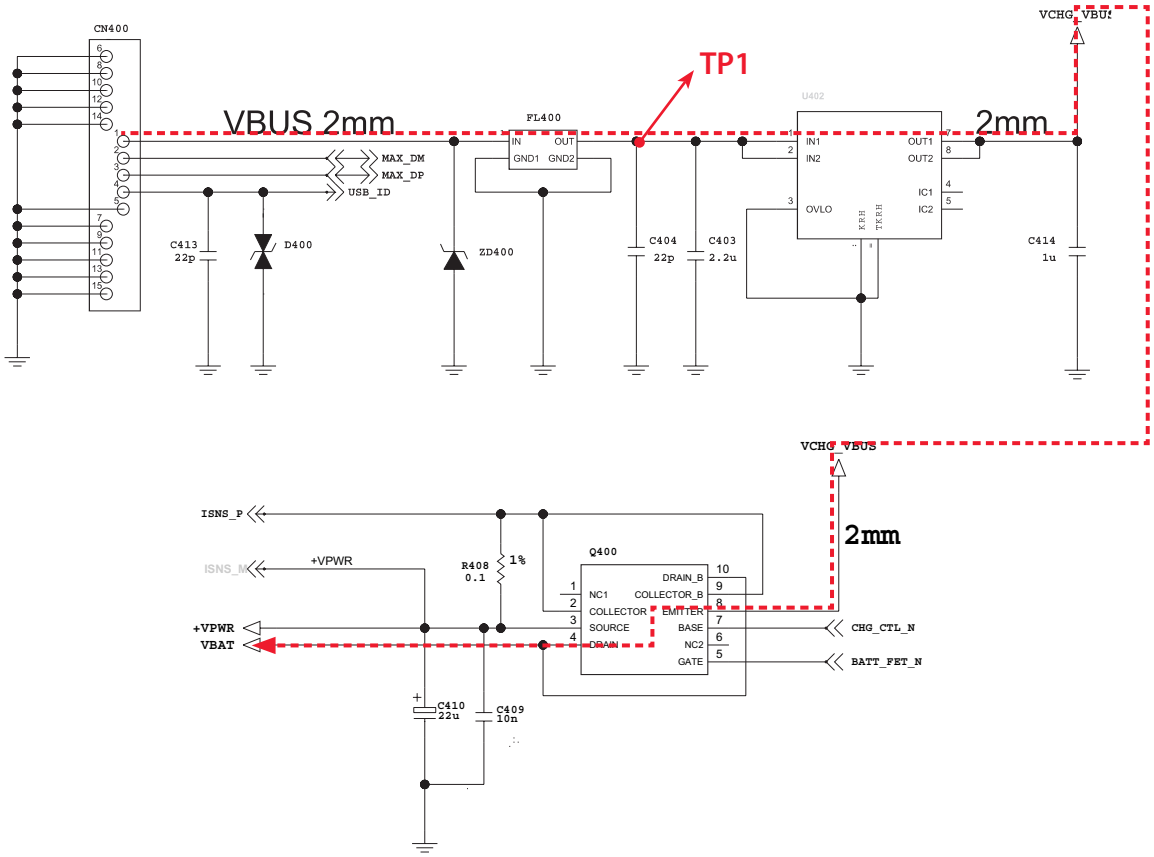

Figure. Charging Current Flow

Charging Procedure
- Connect TA or u-USB Cable
- Control the charging current by PM7540 IC
- Charging current flows into the battery

Check Point
- Connection of TA or USB Cable
- Charging current path(NUS5530MIN)
- Battery

Troubleshooting Setup
- Connect TA and battery to the phone

Troubleshooting Procedure
- Check the charger (TA or USB Cable) connector
- Check the OVP Circuit
- Check the charging current Path
- Check the battery

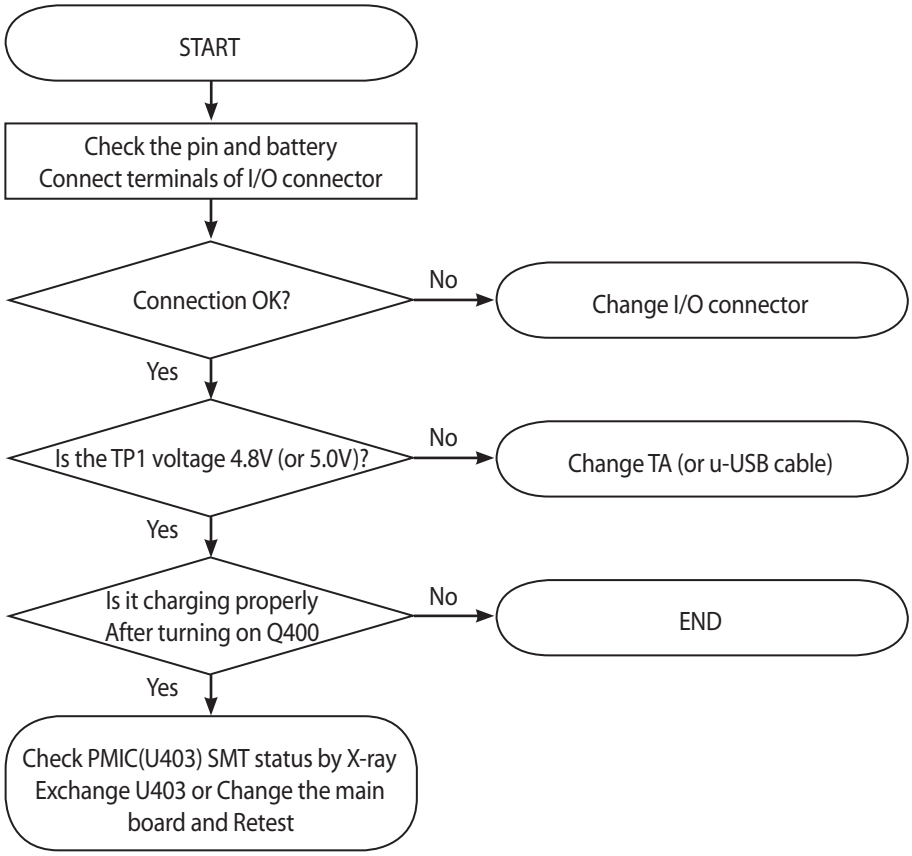

Figure. Charger Troubleshooting Flow

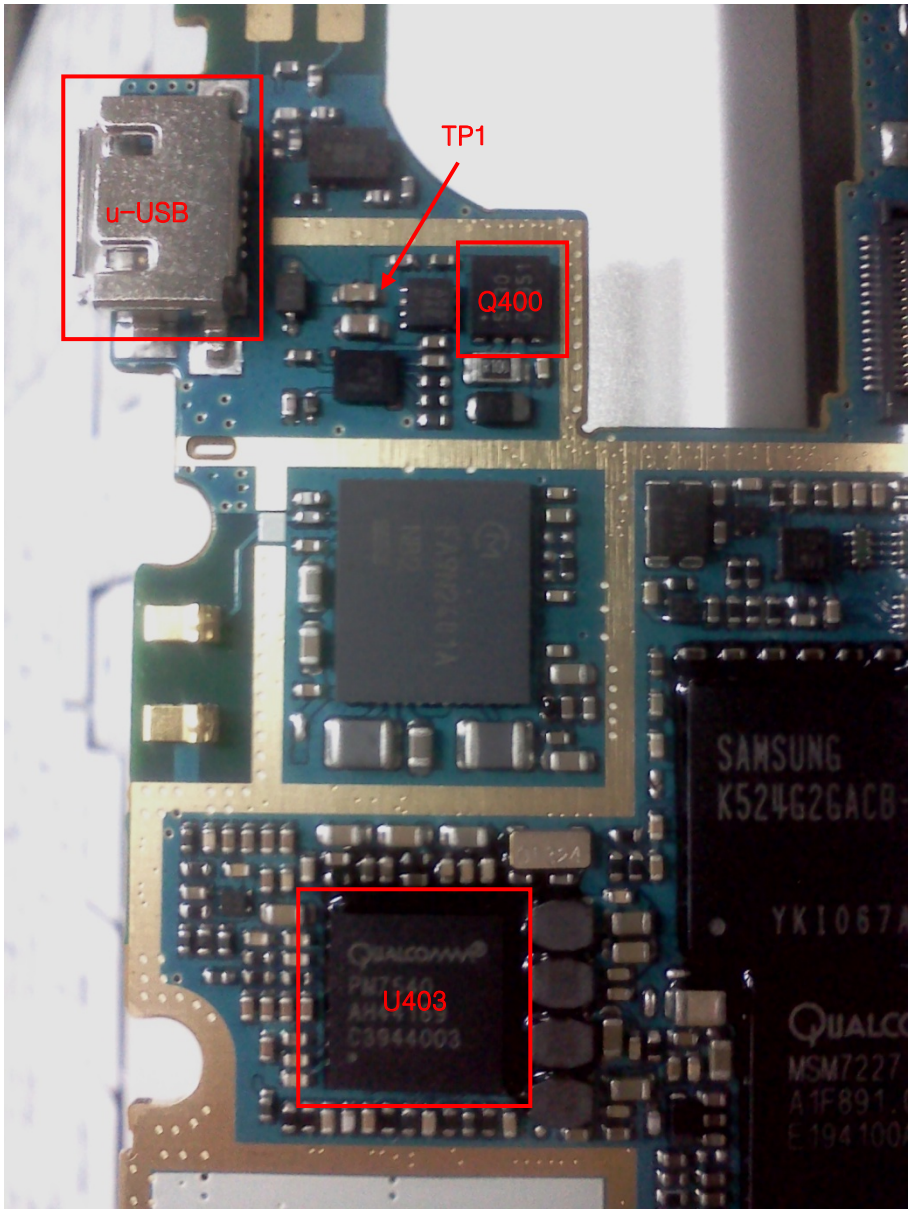

Figure. Charger TEST Point

4.11. USB trouble

USB Initial sequence of GT540 is :
USB connected to GT540 → VCHG_VBUS go to 5V → VERG_MSME_1.8V is about 1.8V → USB_CLK is OK → USB work

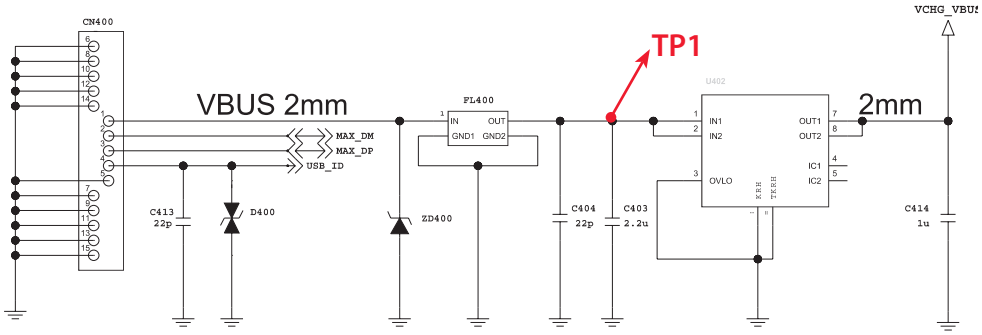

TA OVP Circuit

USB 3.3V LDO

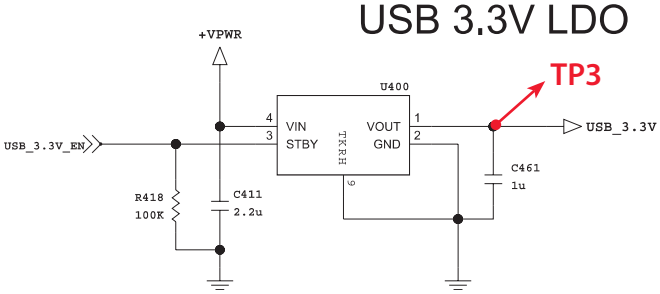

TCXO Circuit

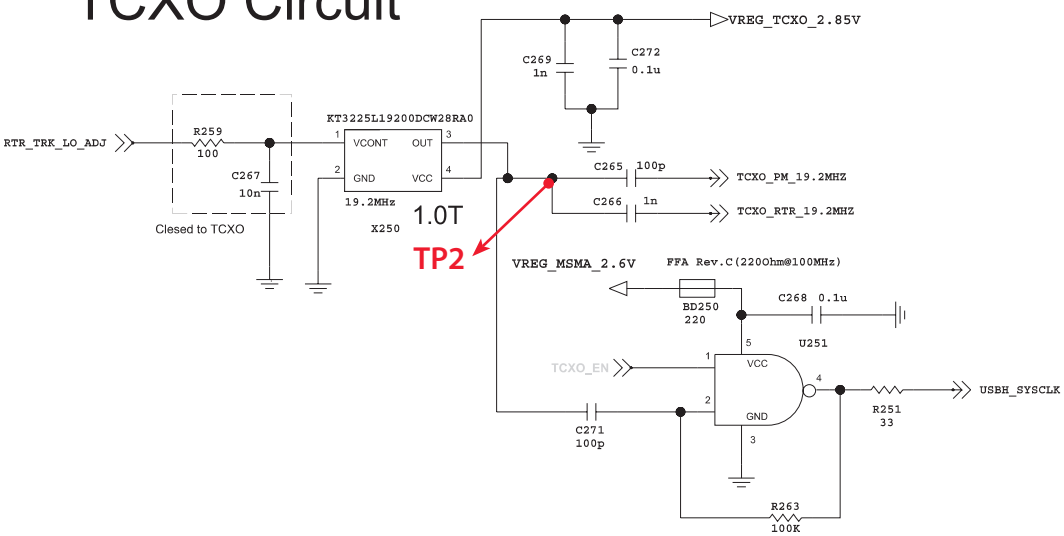

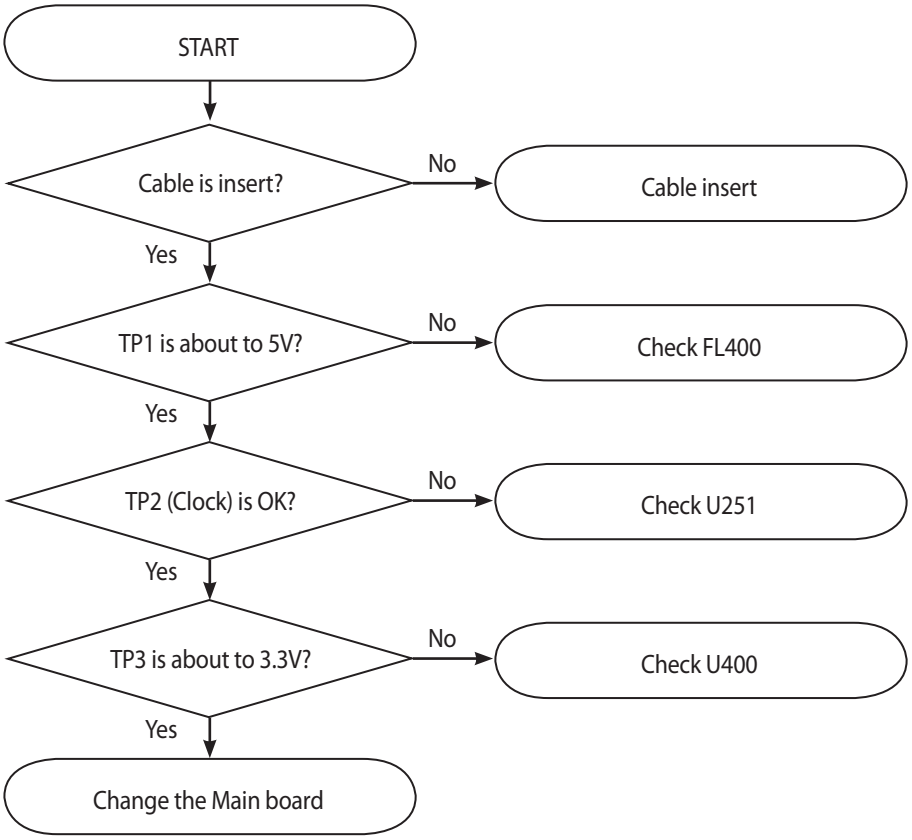

Figure. USB Troubleshooting Flow

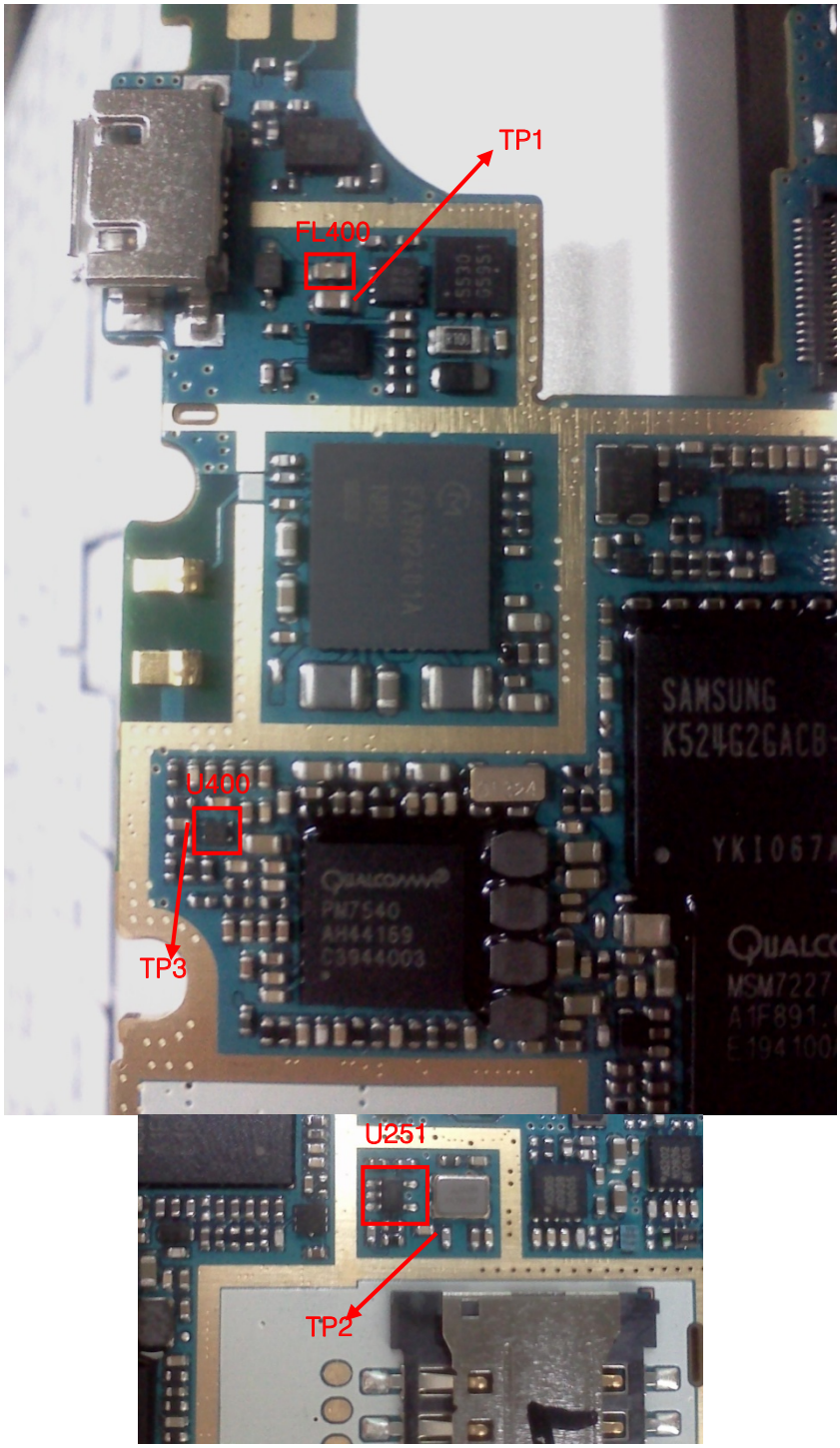

Figure. USB TEST Point

4.12. Audio trouble

4.12.1. Receiver path

Voice Receiver path as below:
MSM7227 EAR1_ON/EAR1_OP->Audio subsystem (WM9093)->Main to SUB_PCB->Speaker

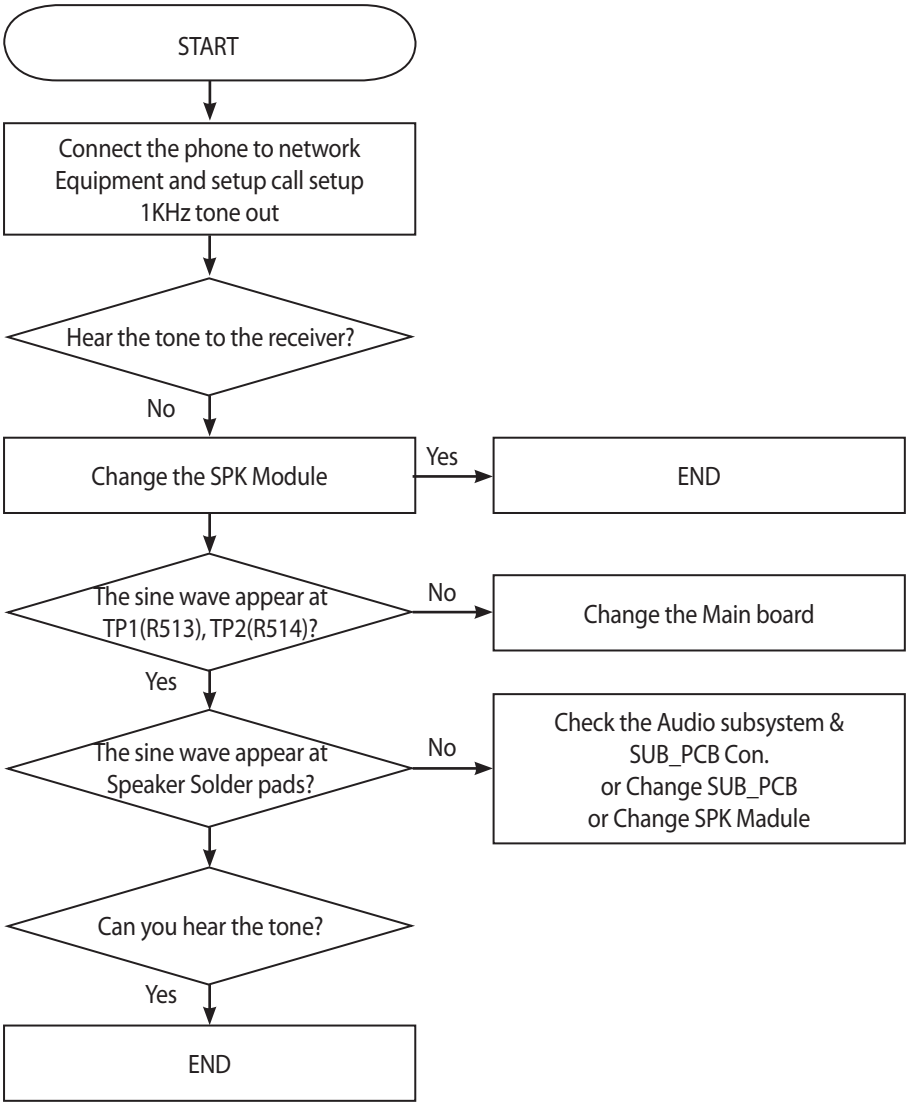

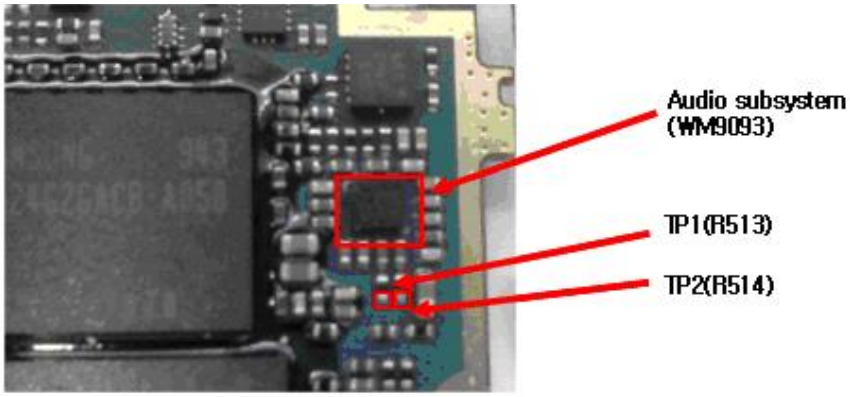

Speaker Solder Pads

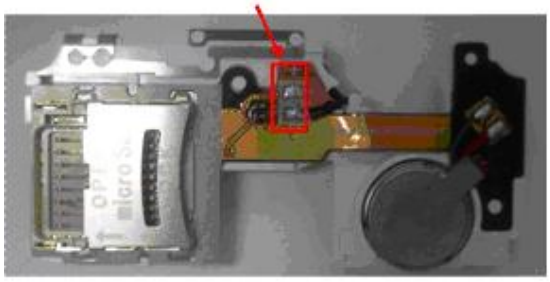

TP1(R513),TP2(R514)

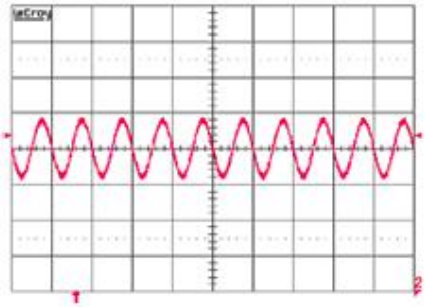

Speaker SUB_PCB Connector

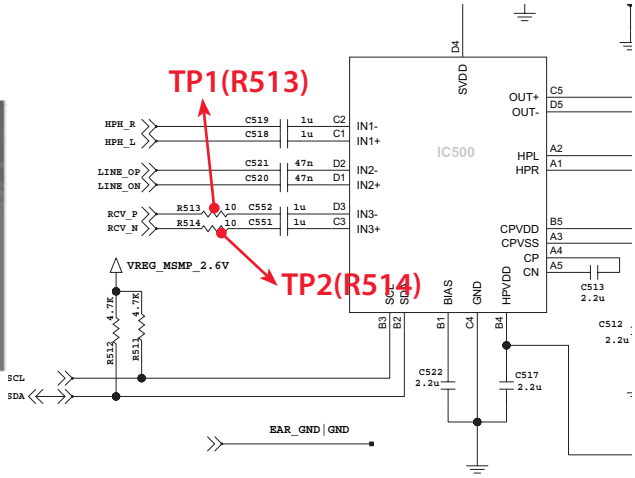

4.12.2. Headset path (Voice & Multimedia play)

Voice path for Head_Set as below:
MSM7227 HPH_R, HPH_L -> Audio subsystem (WM9093) -> 3.5pi Ear-jack

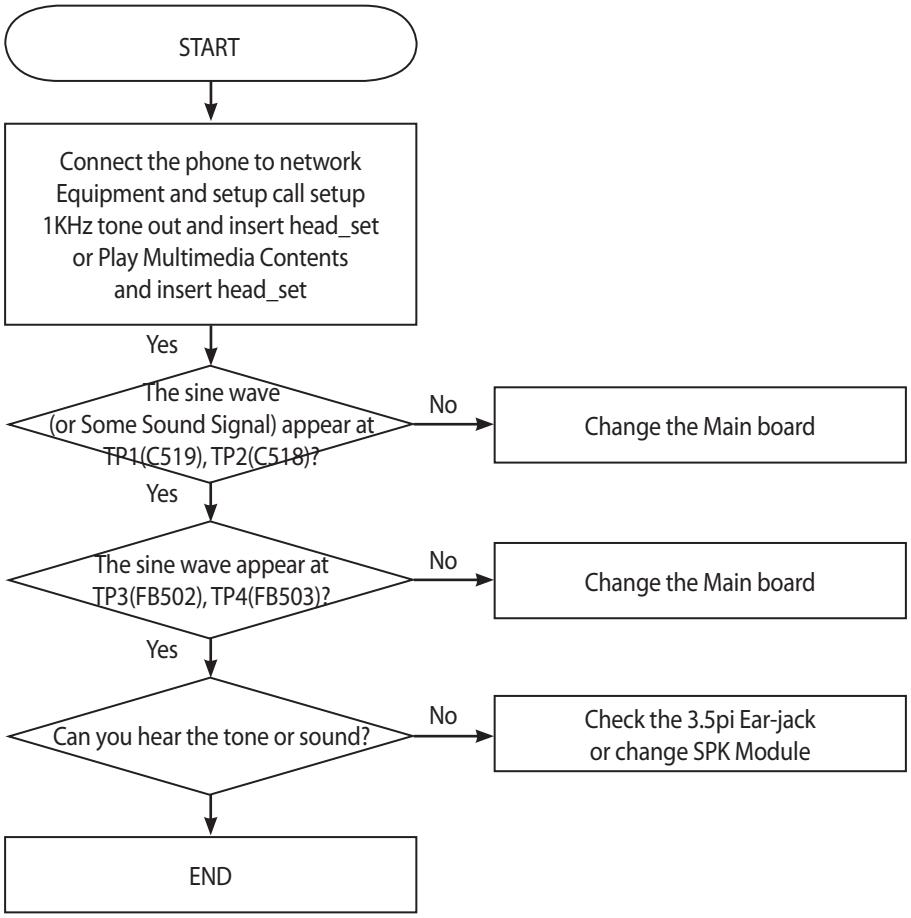

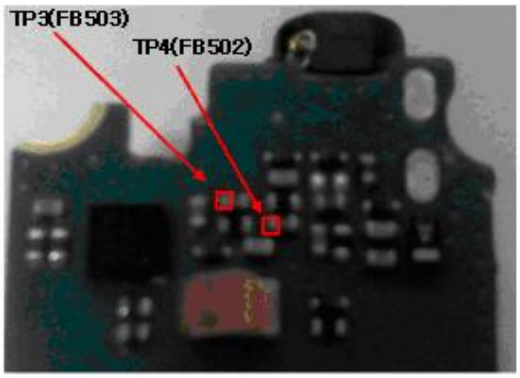

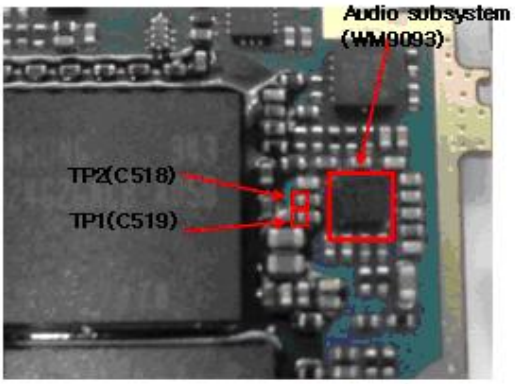

TP1(C519),TP2(C518),TP3(FB503),TP4(FB504)

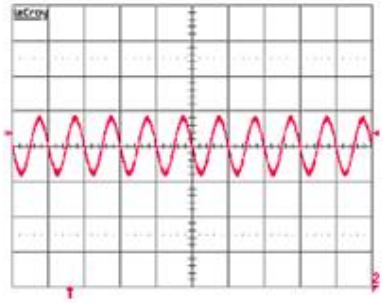

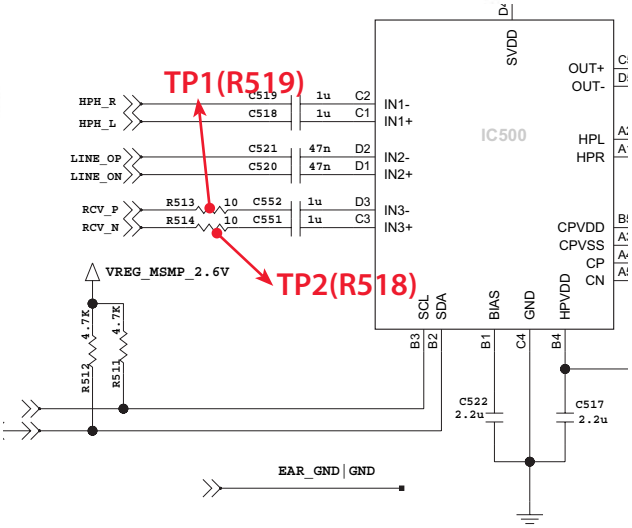

3.5 EAR_JACK

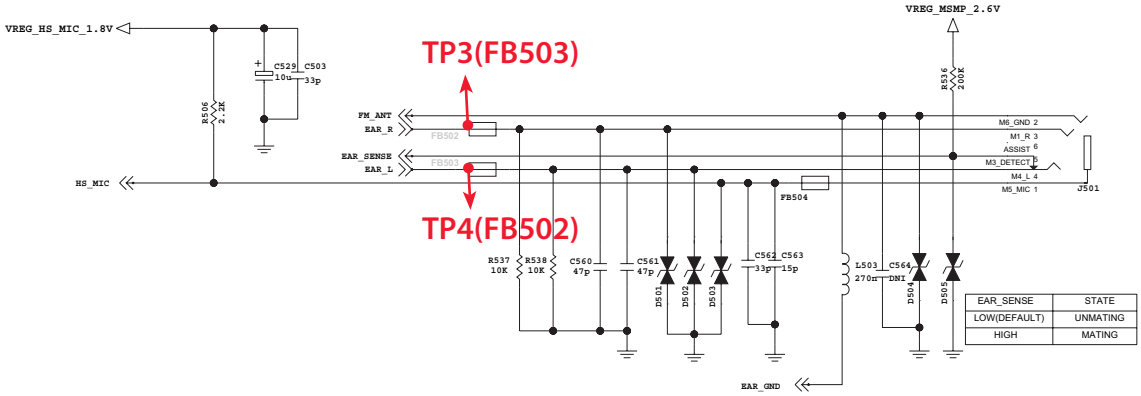

EAR_SENSE	STATE
LOW(DEFAULT)	UNMATING
HIGH	MATING

4.12.3. Loud speaker path (voice speaker phone, Multimedia play)

Loud speaker path as below:
MSM7200A LINE_OP,ON -> Audio subsystem (WM9093) ◊Main to SUB_PCB -> Speaker PAD

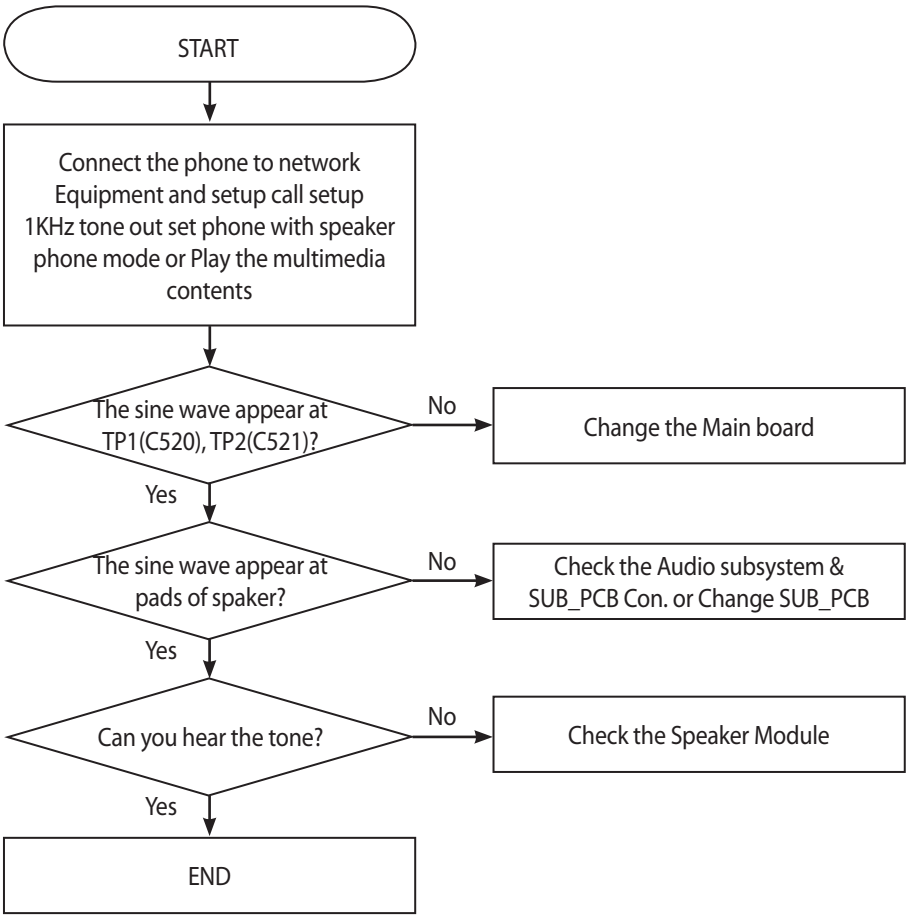

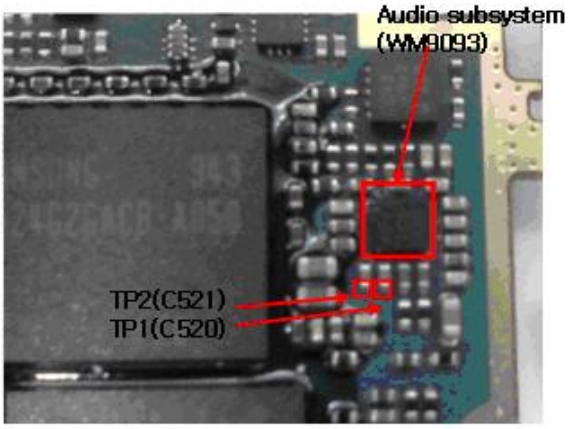

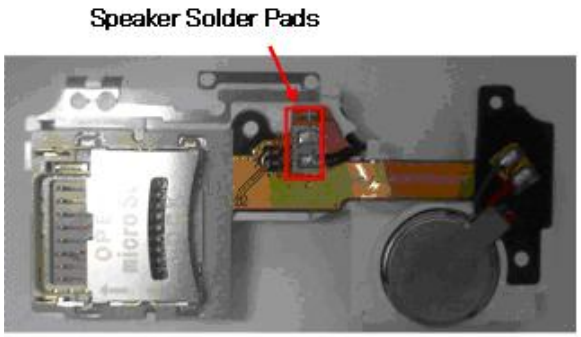

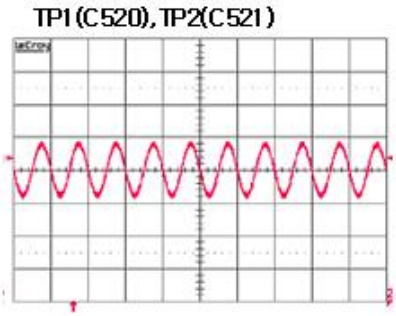

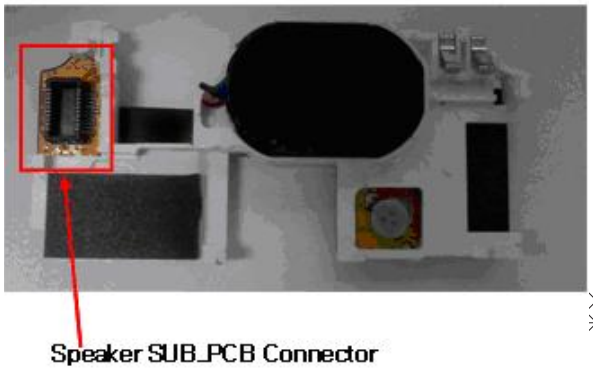

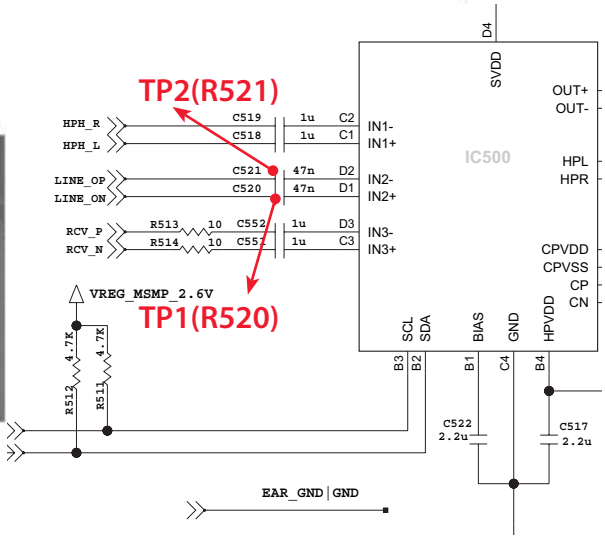

4.12.4. Microphone for main MIC

Main Microphone path as below:
MIC ◊ R508&R509 -> C504&C505 -> MSM7227

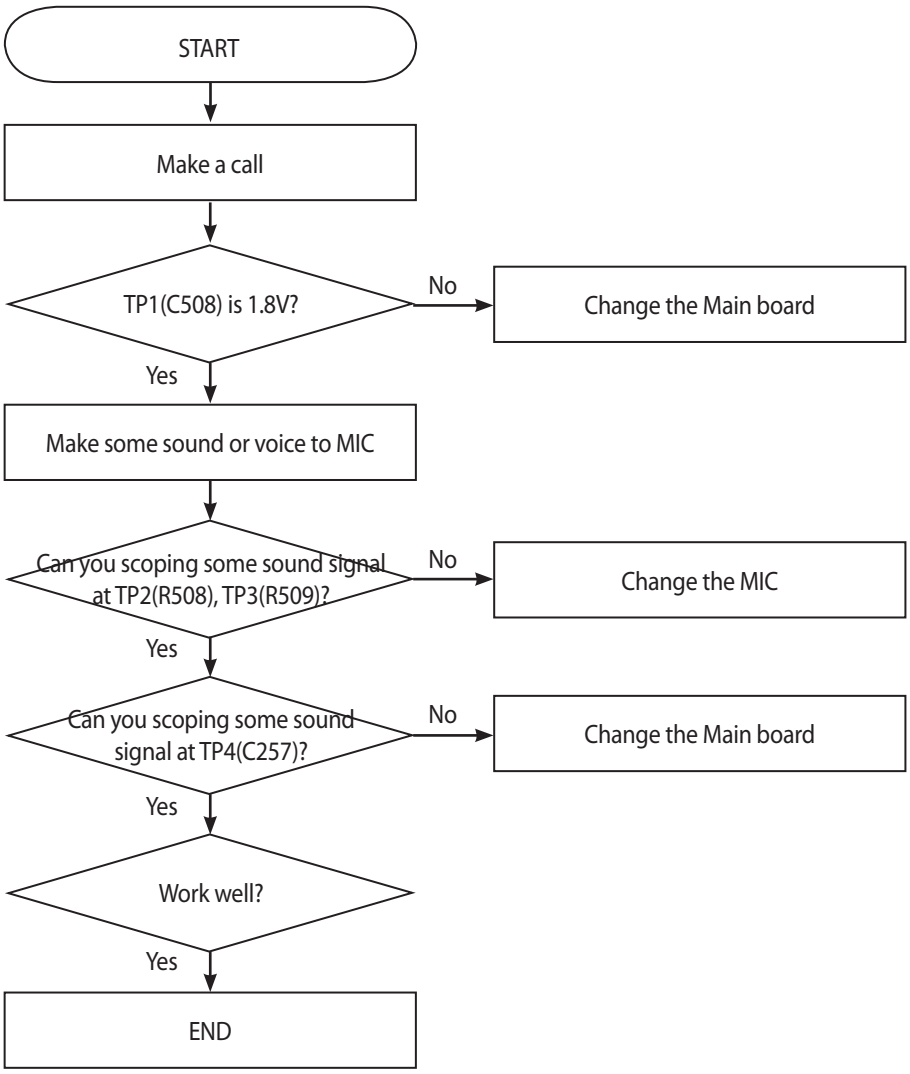

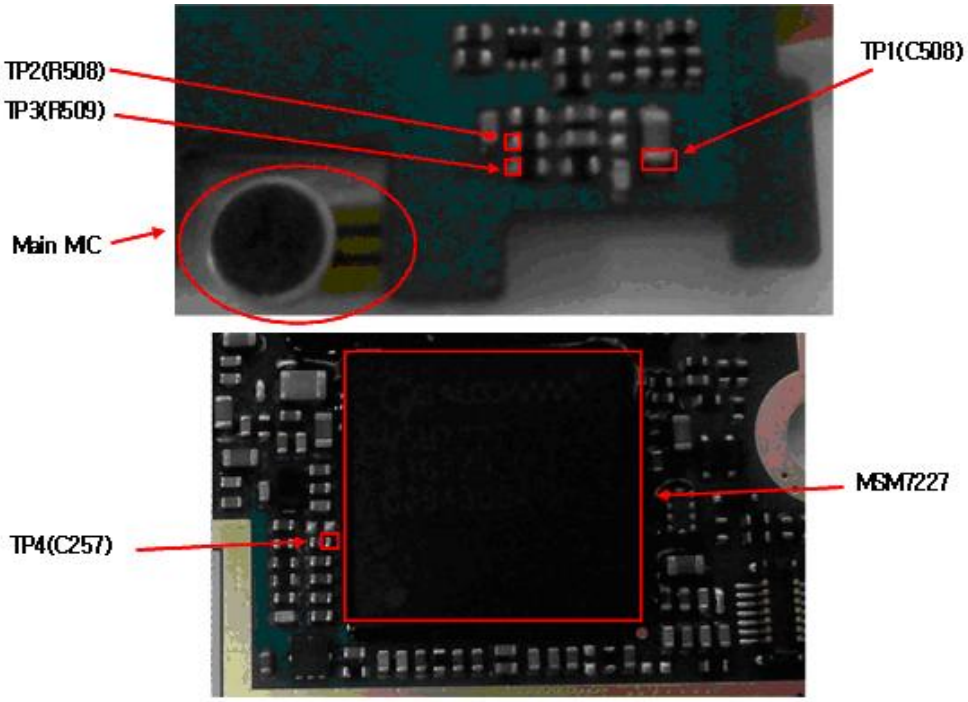

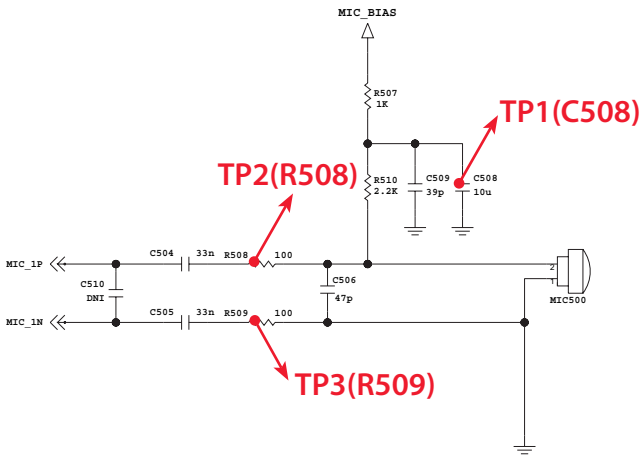

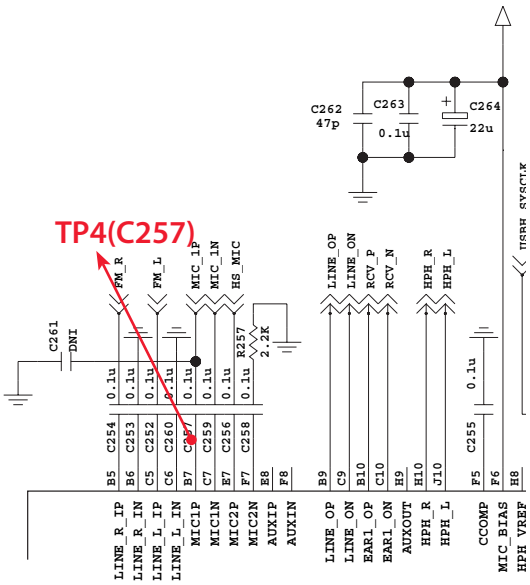

4.12.5. Microphone for headset

MIC for Head_Set path as below:
Insert Headset ◊ Interrupt which are the signal of Headset detecting arise in EAR_SENSE
→ MIC BIAS(PMIC_R506 : 1.6V~1.8V(MIC BIAS) -> MIC signal -> FB504 ->
-> C256 -> MSM7227

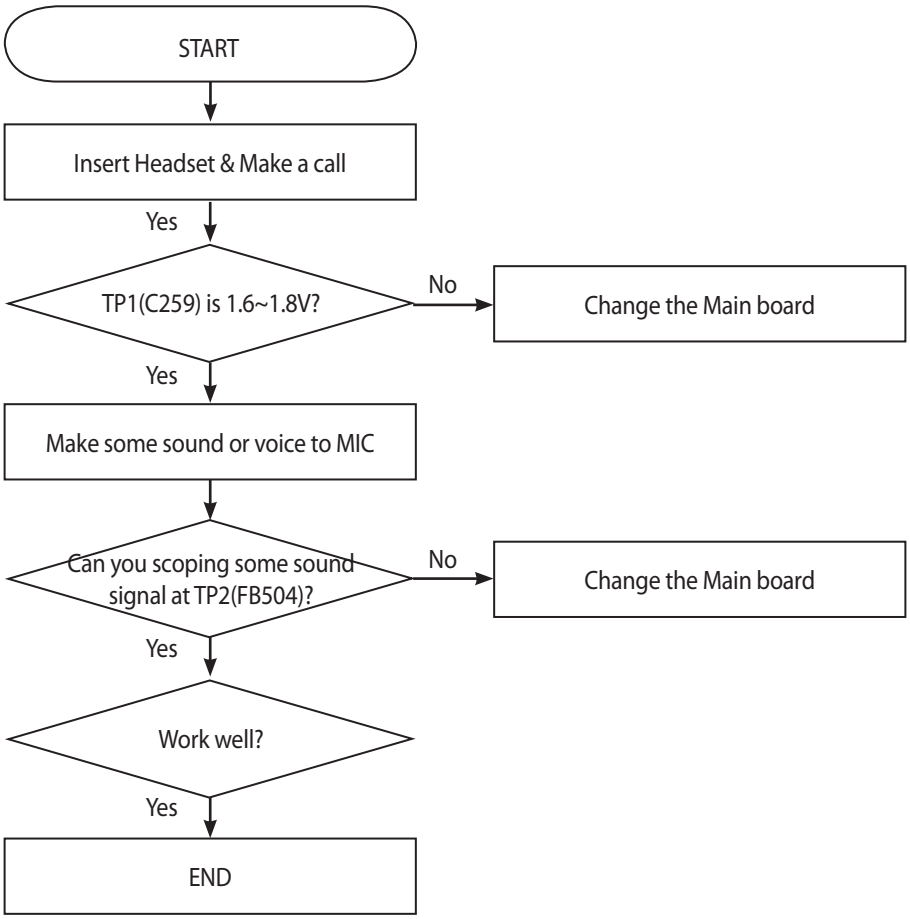

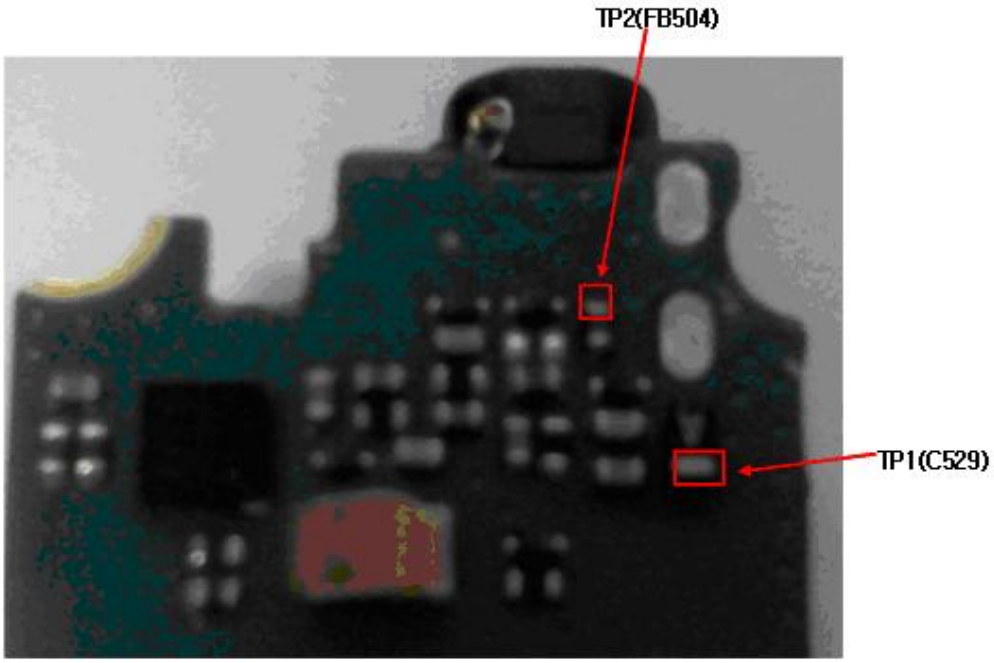

3.5 EAR_JACK

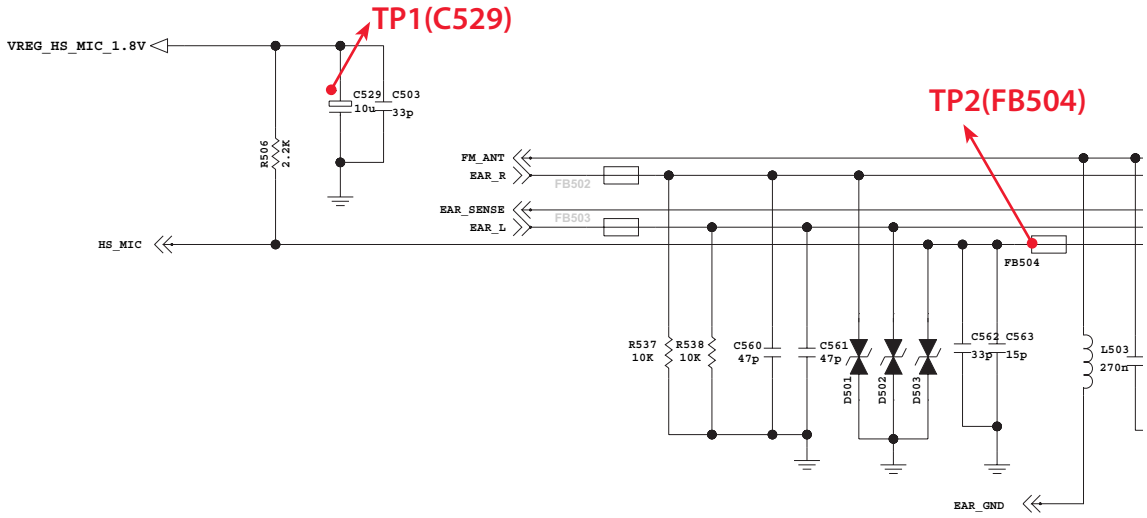

4. 13 3M AF Camera trouble

3M camera control signals are generated by ISX005 and MSM7227.

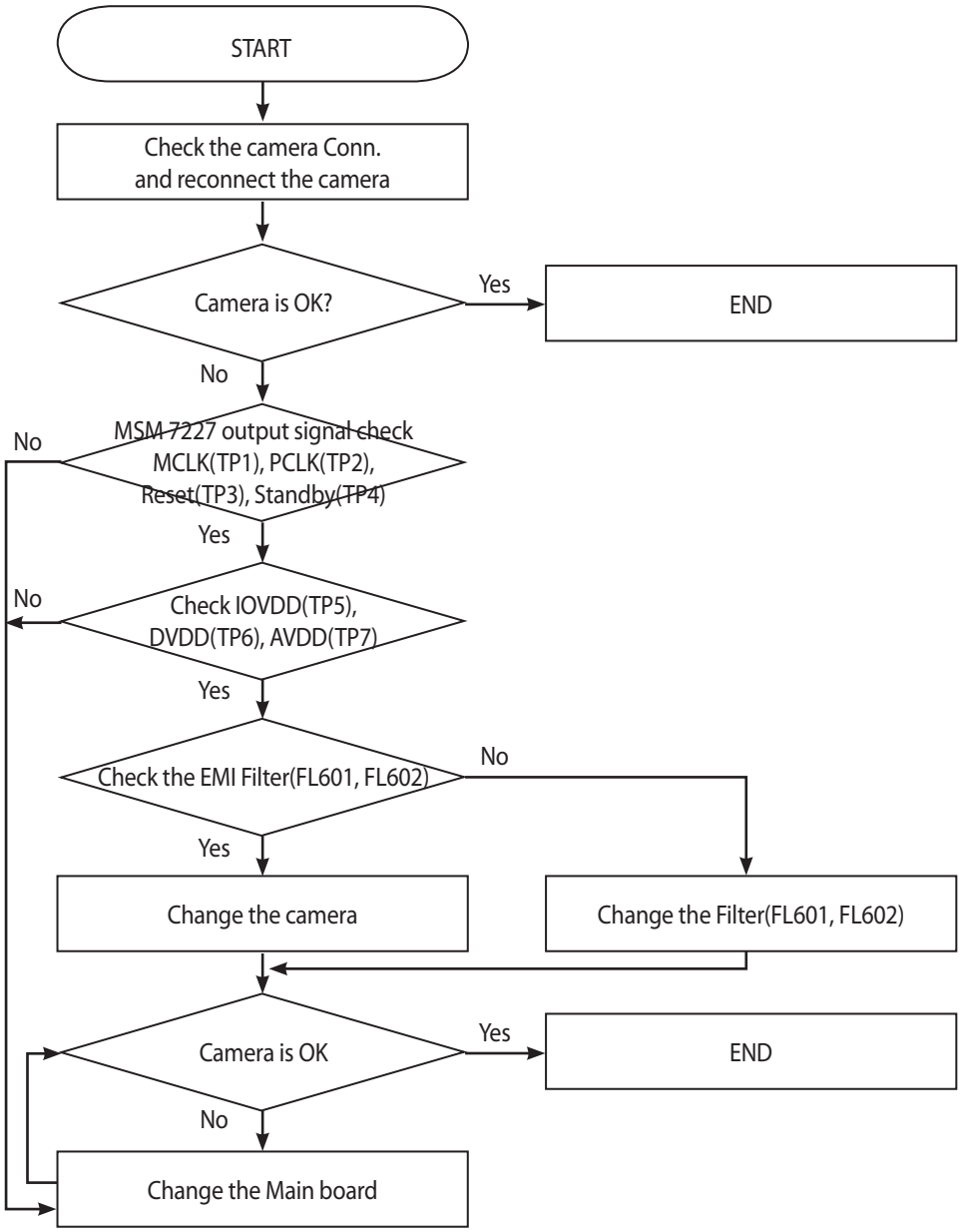

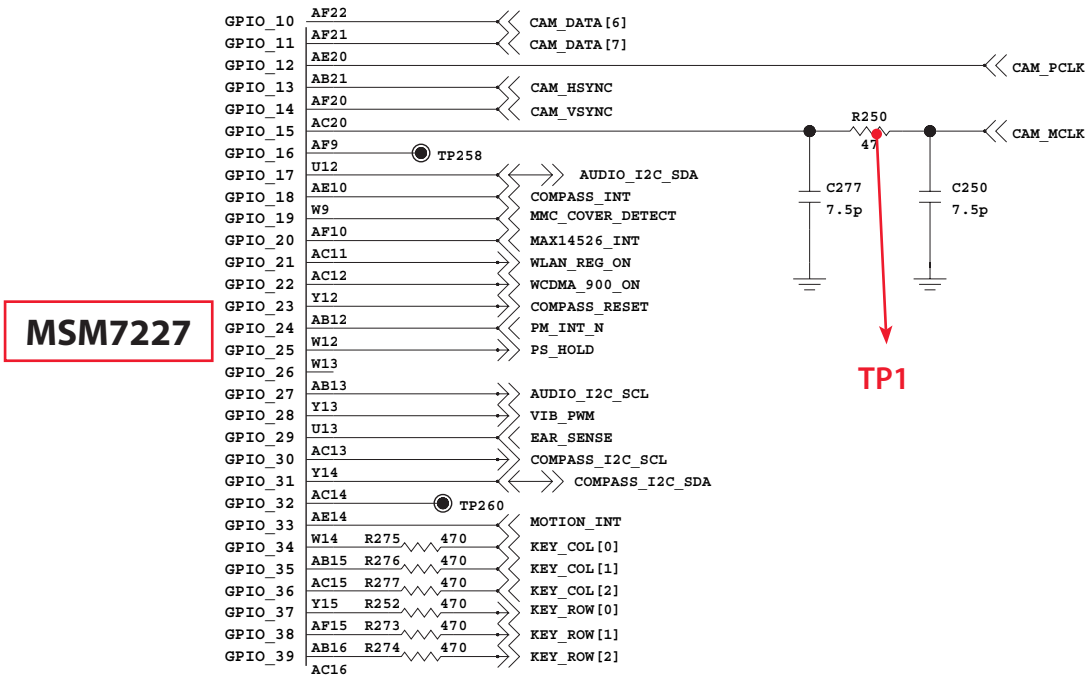

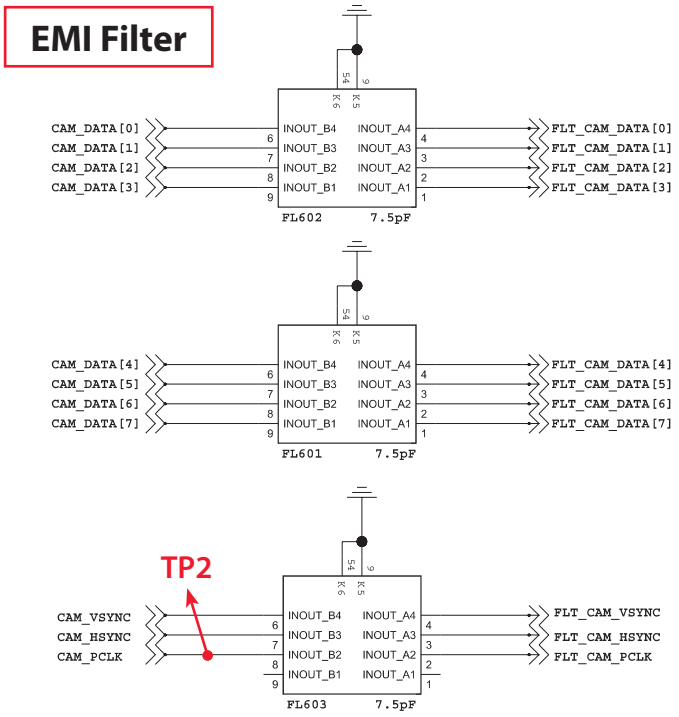

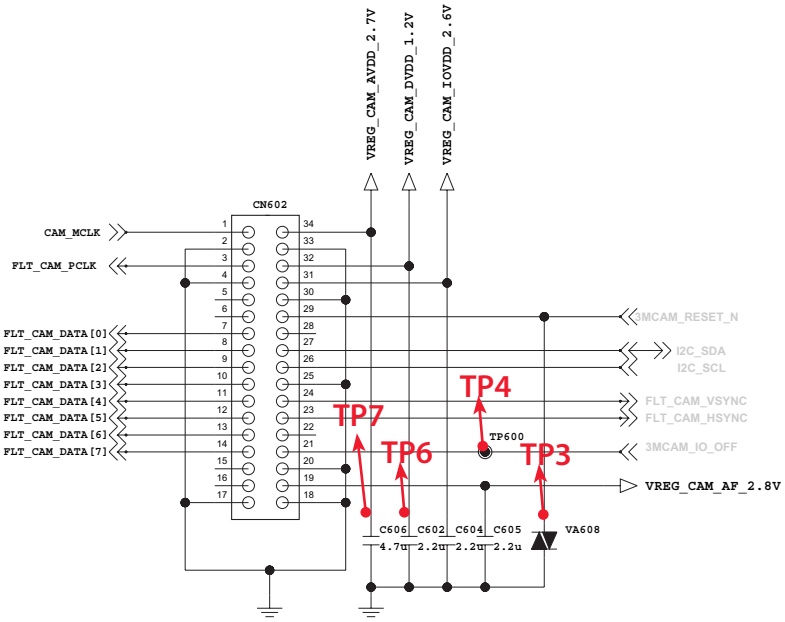

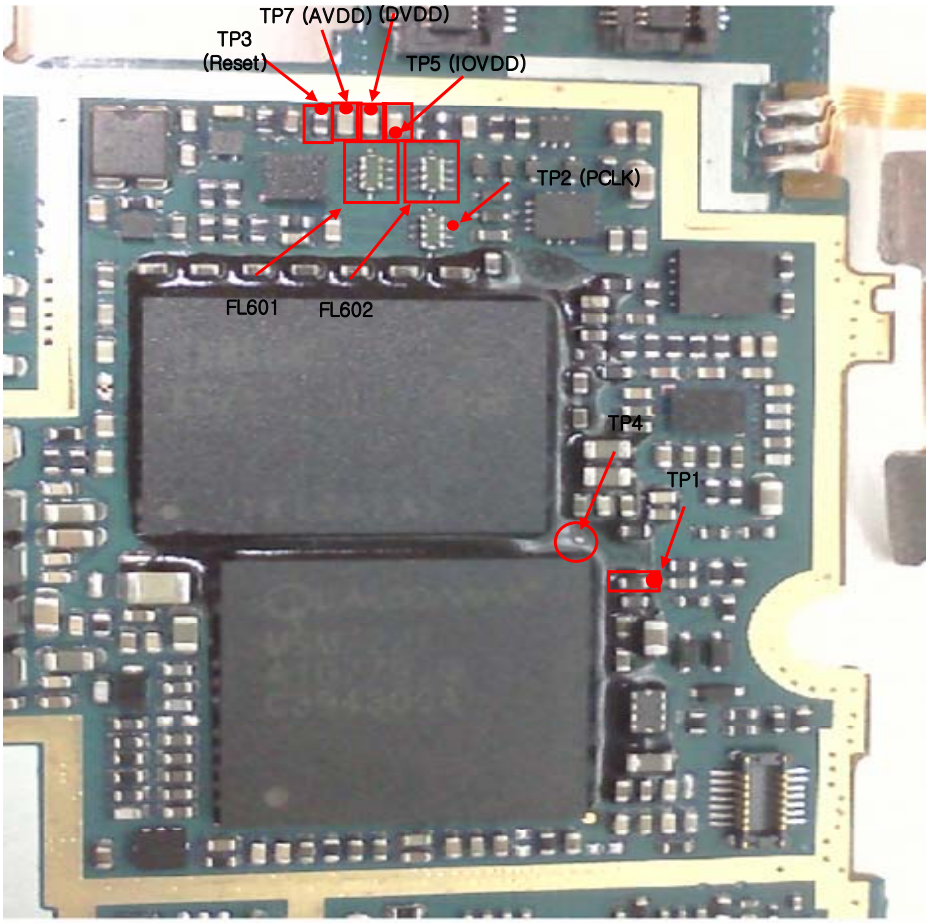

4. 14. Main LCD trouble

Main LCD control signals are generated by MSM7227. Those signal's path are :
MSM7227 -> LCD Module

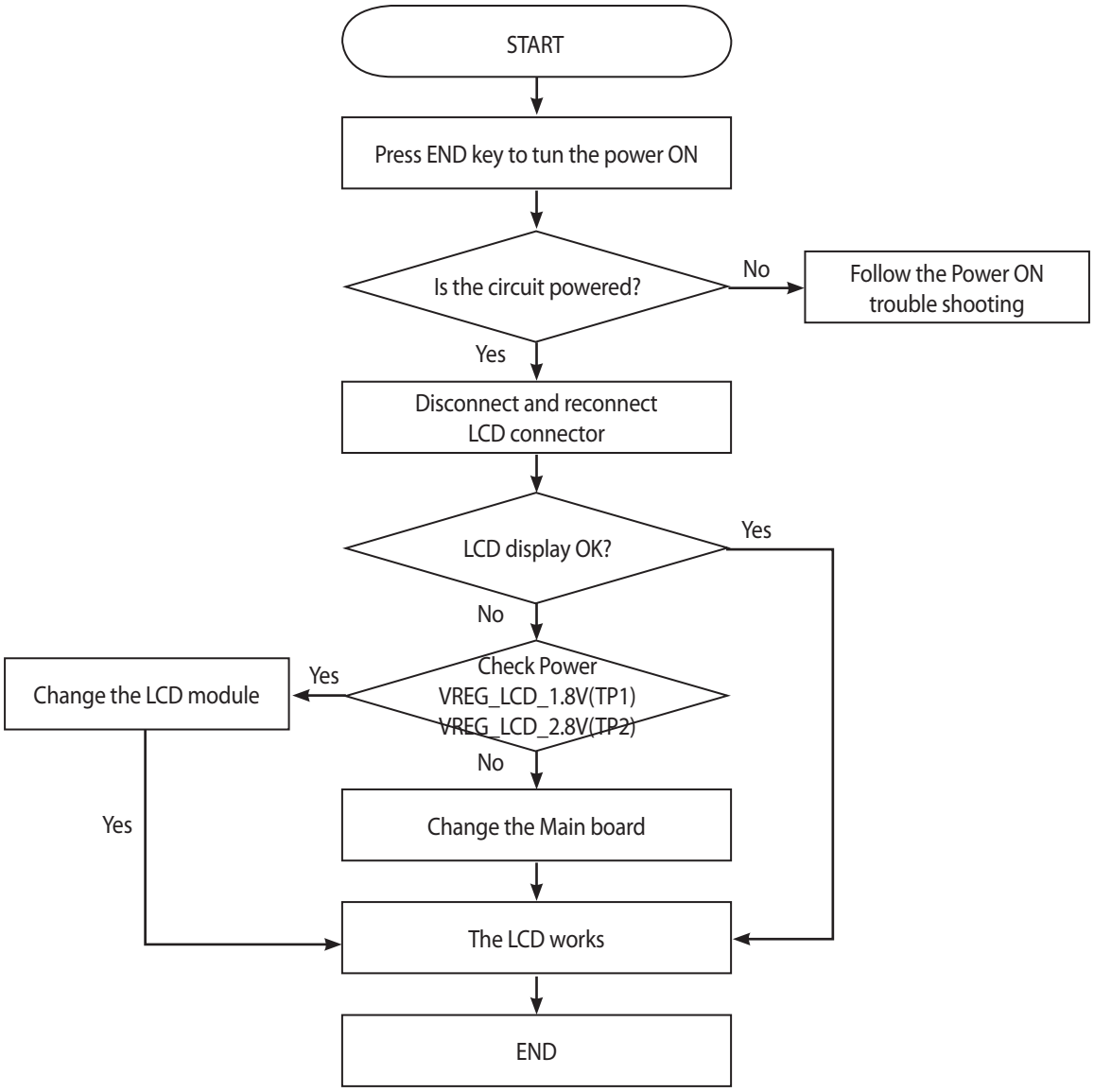

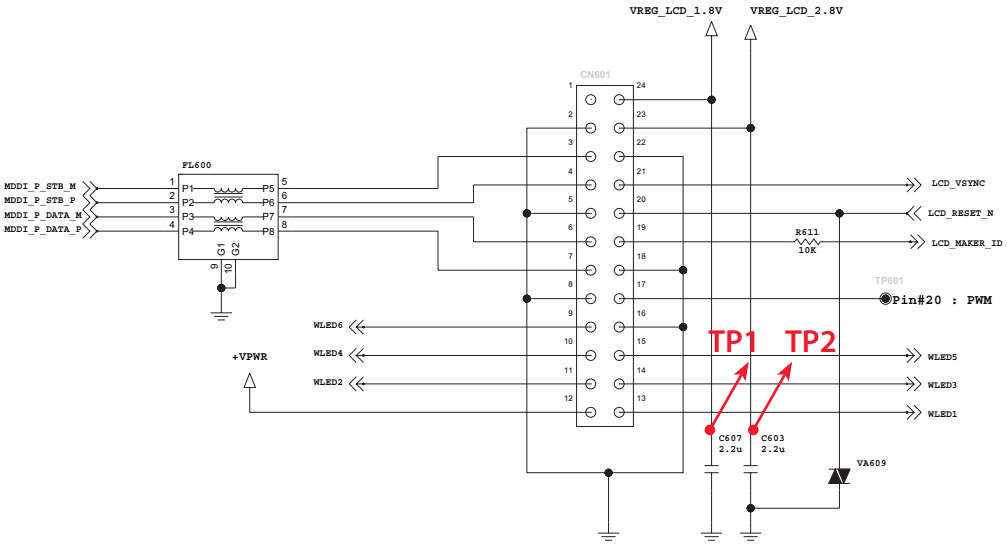

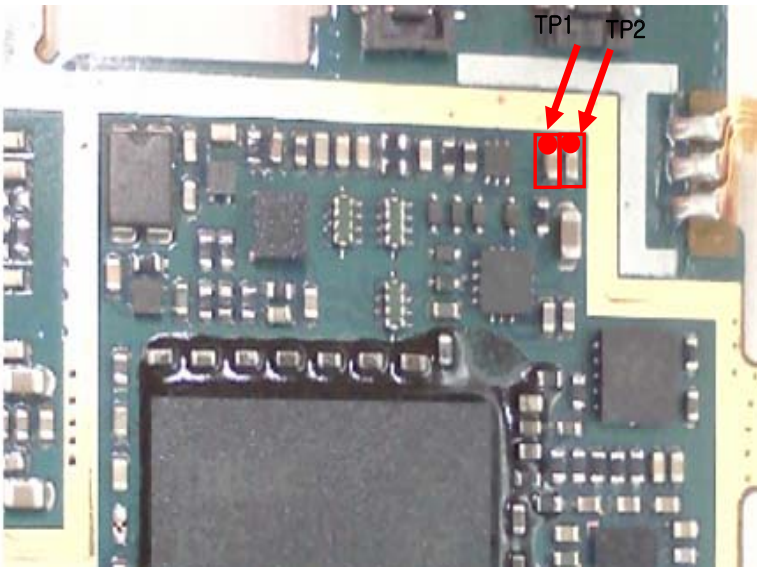

4.15 SIM Detect Troubleshooting

USIM Initial sequence of GW620 is :
SIM_CLK,SIM_RST,SIM_IO triggered → VRUIM_3.0V go to 2.85V → SIM IF work

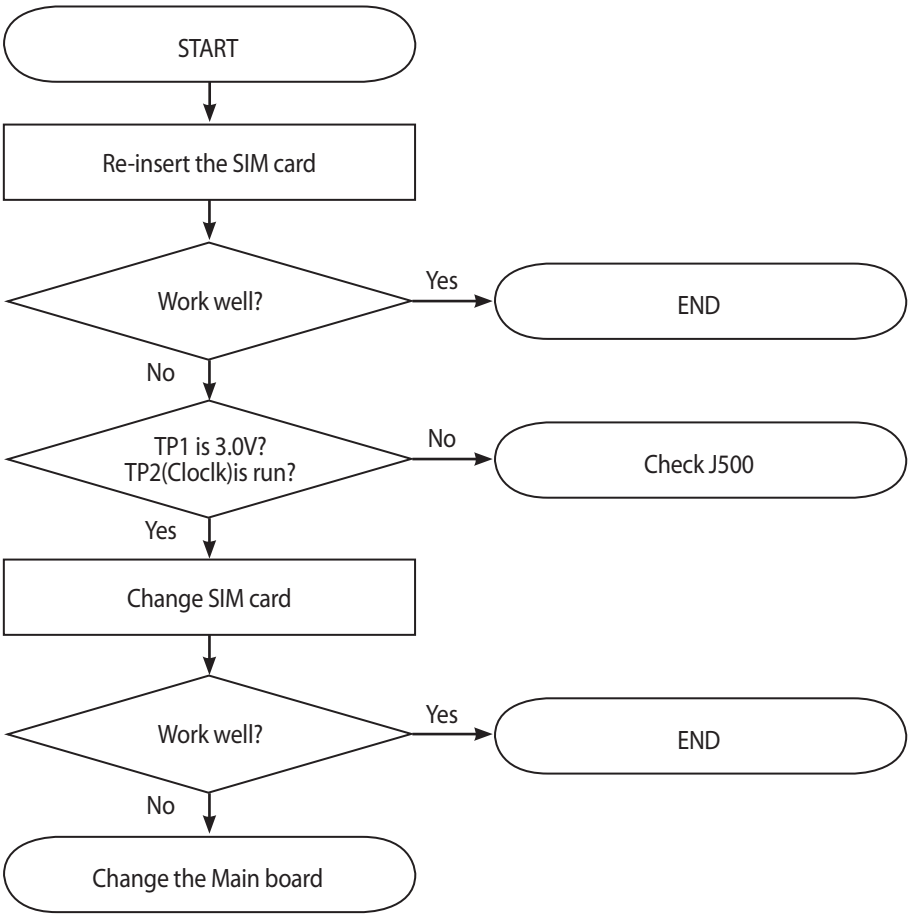

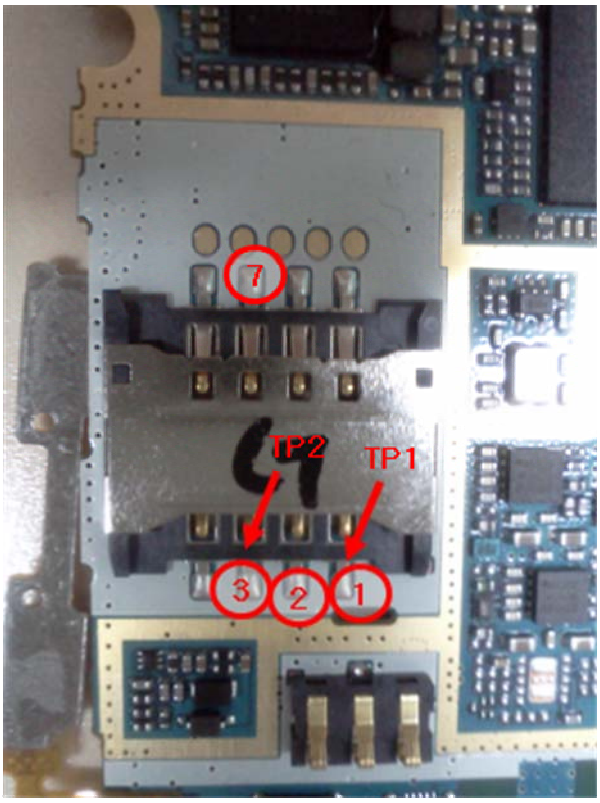

1 VRUIM_3.0V

2 SIM_RST

3 SIM_CLK

7 SIM_IO

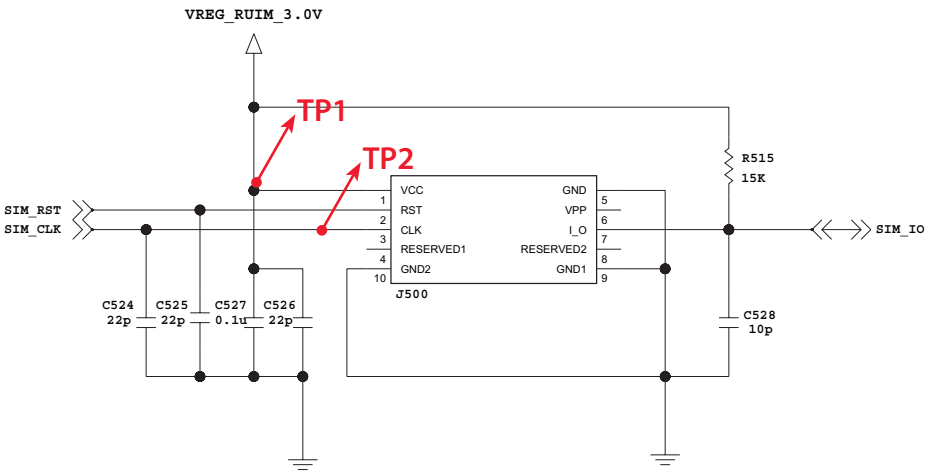

Figure .USIM part schematics

4.16 Side Key Troubleshooting

4.16.1 Volume Key FPCB

Volume Key consists of Volume up and Volume down.

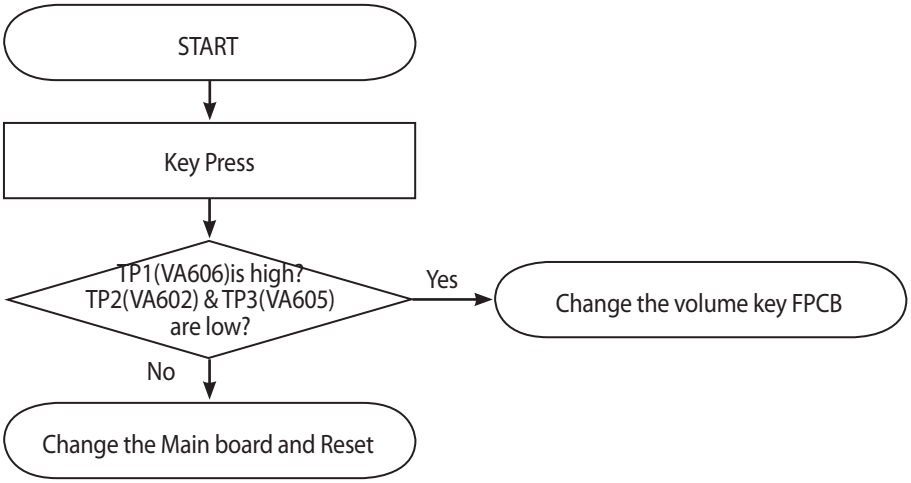

Figure. Volume key Troubleshooting Flow

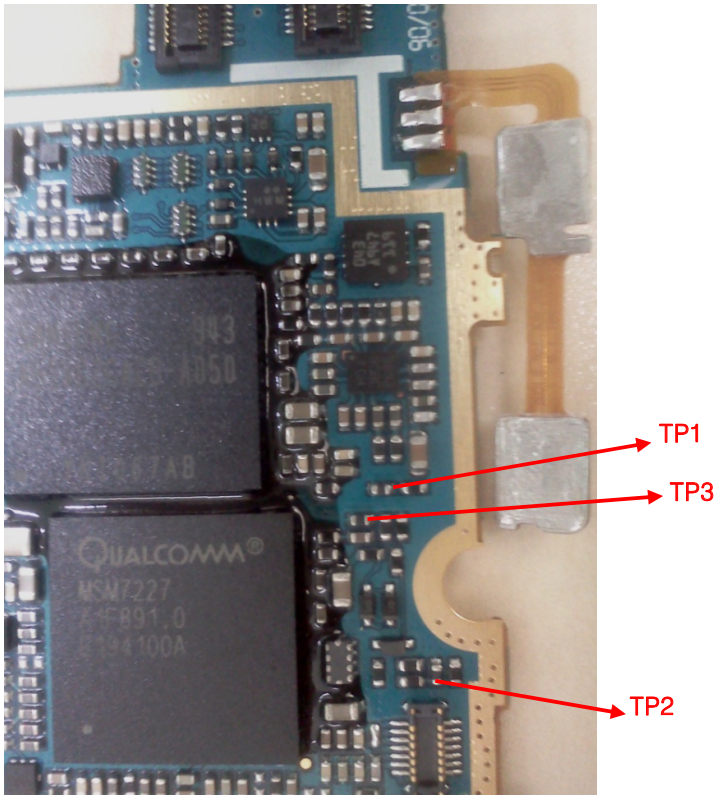

Figure. Volume Key TEST Point

4.16.2 Camera & Search Key FPCB

Camera Key is composed of Focus, Shutter and Quick Search Menu.

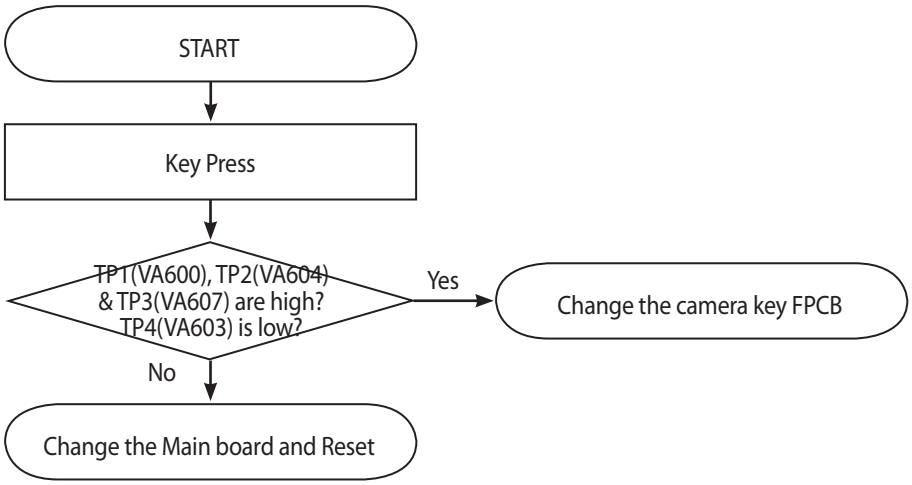

Figure. Volume key Troubleshooting Flow

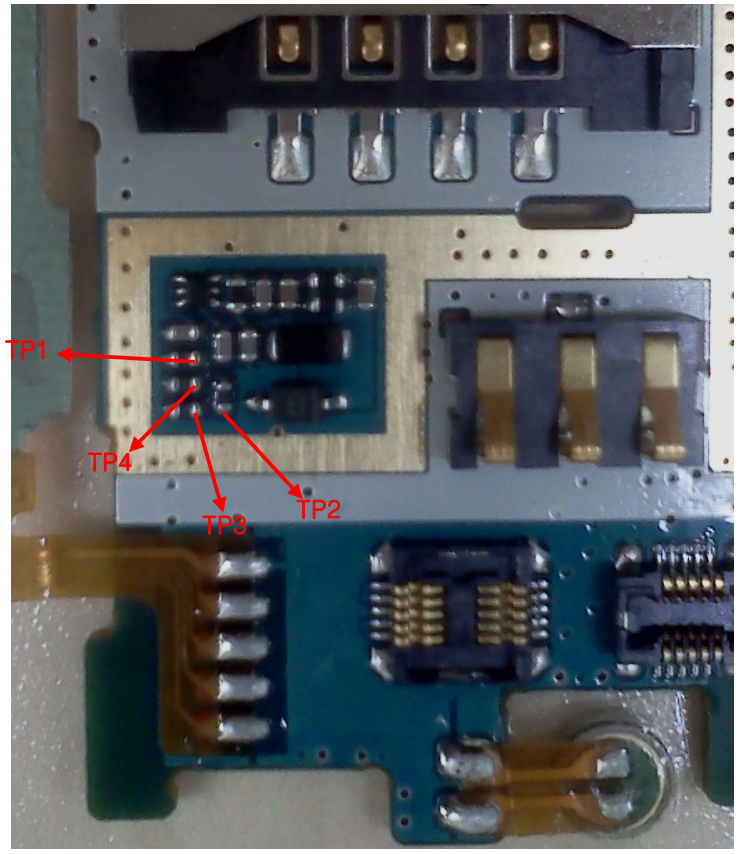

Figure. Camera Key TEST Point

4.17 VIBRATOR

Linear Motor signal's path are MSM7227 → Motor Driver IC(U501) → SUB FPCB.
U501 uses the PWM pulse.

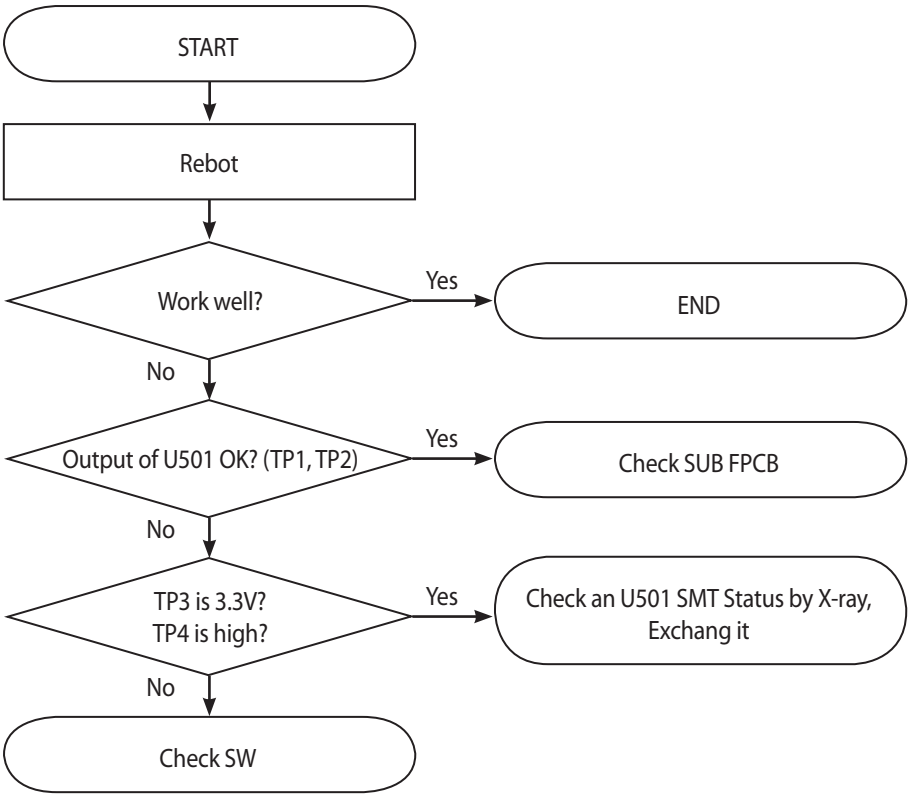

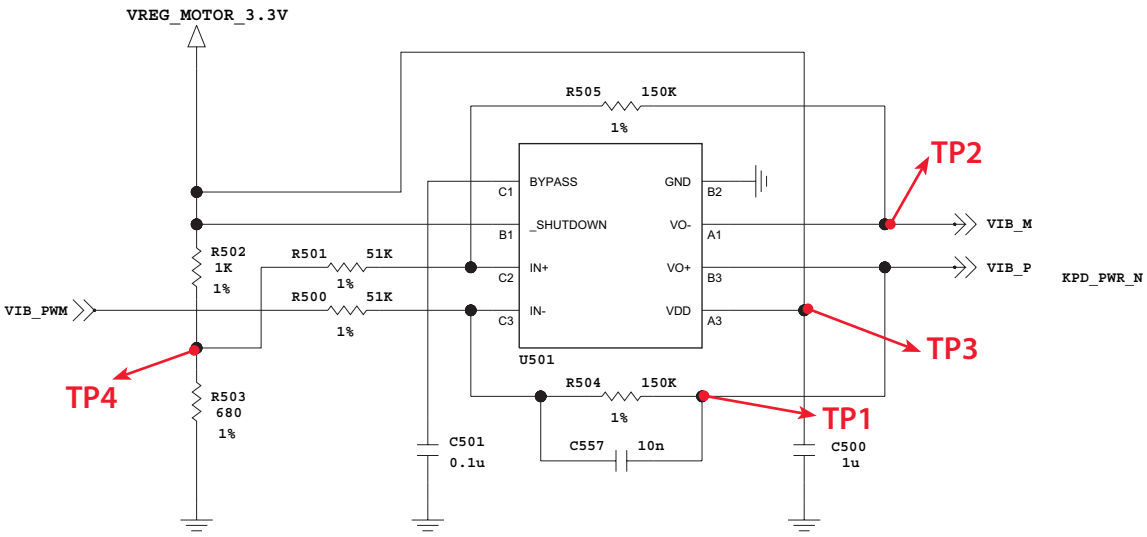

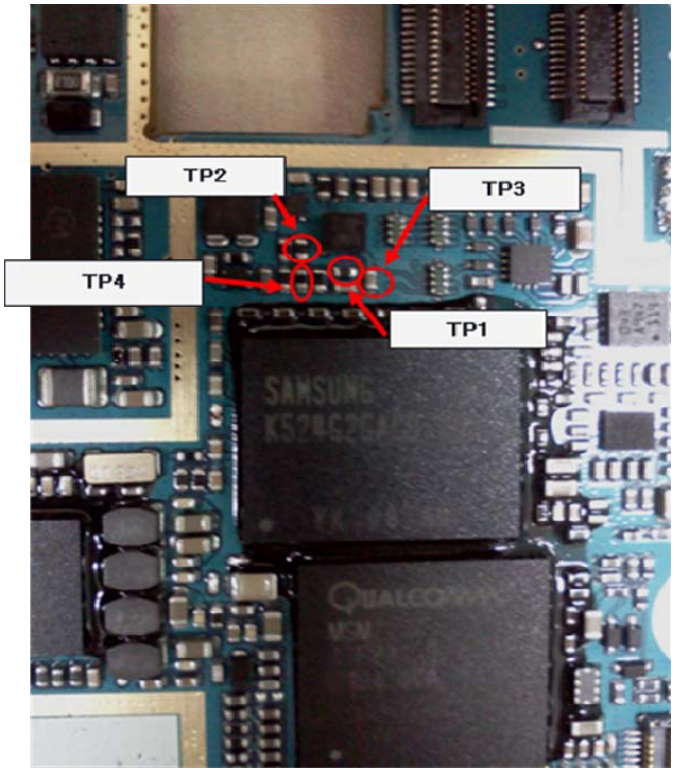

4.18 Motion Sensor on/off trouble

Motion Sensor is worked as below :
Accelerometer Sensor function On ➔ Tilt the phone (90˚) ➔ The screen is had rotated automatically.

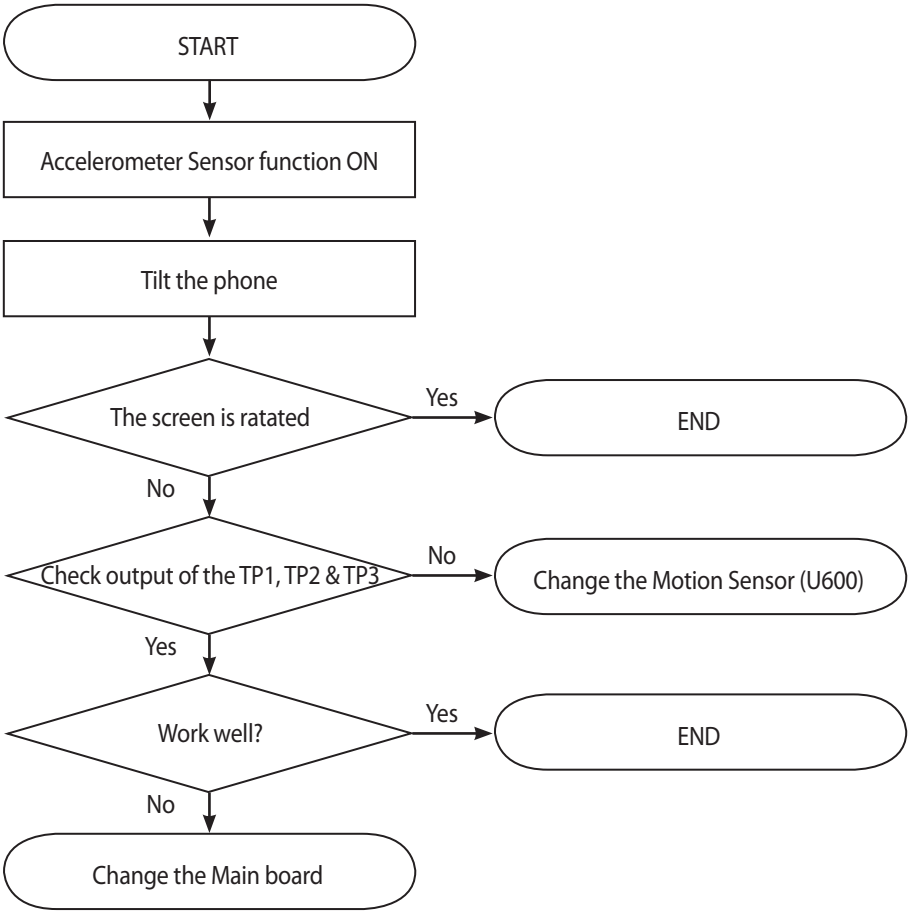

1) Measurement
- -. VREG_MSMP_2.6V : 2.6V
- -. MOTION_INT : High enable
- -. MOTION_I2C_SDA
- -. MOTION_I2C_SCL

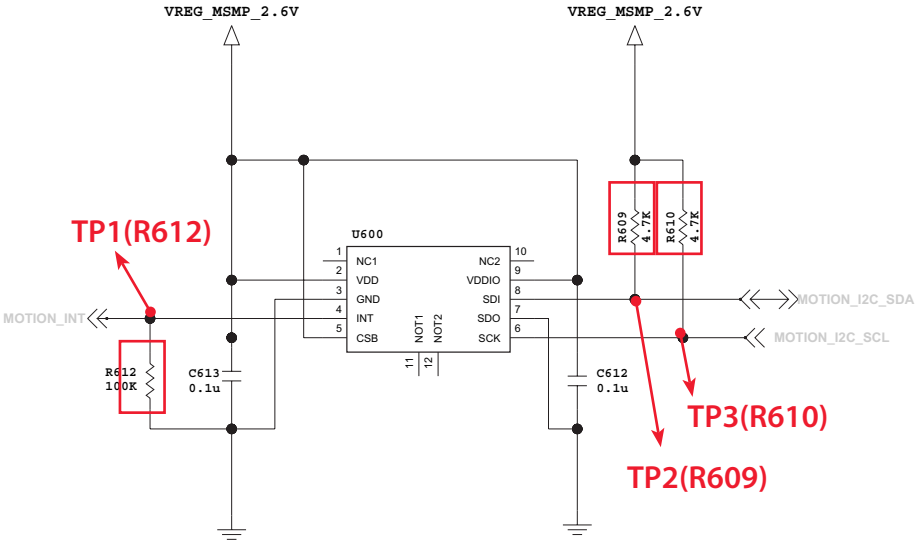

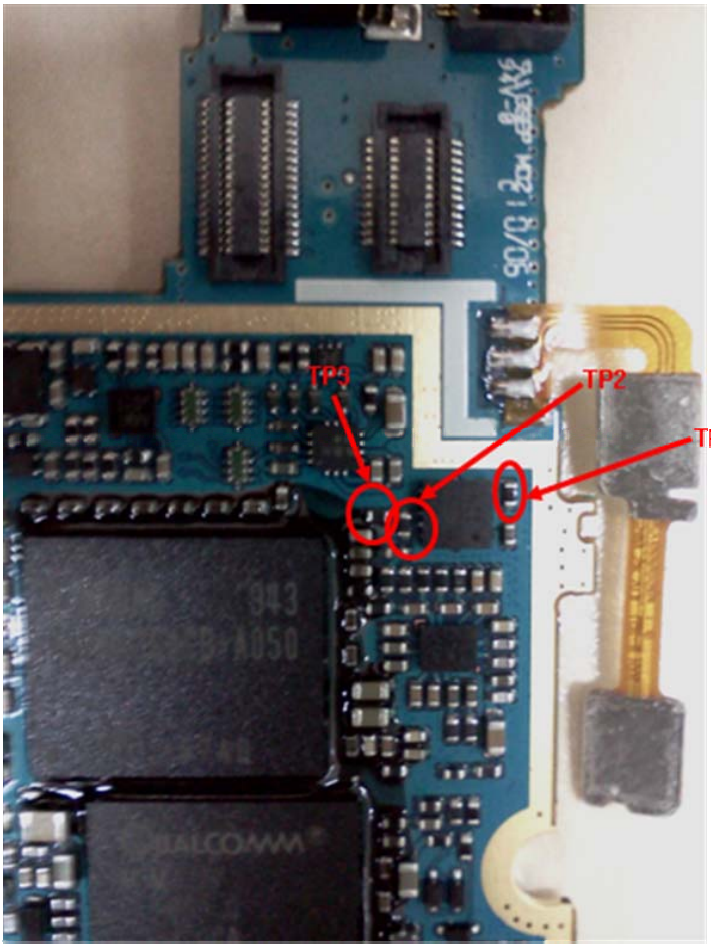

4.19 Compass Sensor on/off trouble

Compass Sensor is worked as below :
Compass Sensor function On ➔ According to the Phone position, The screen indicate the direction.

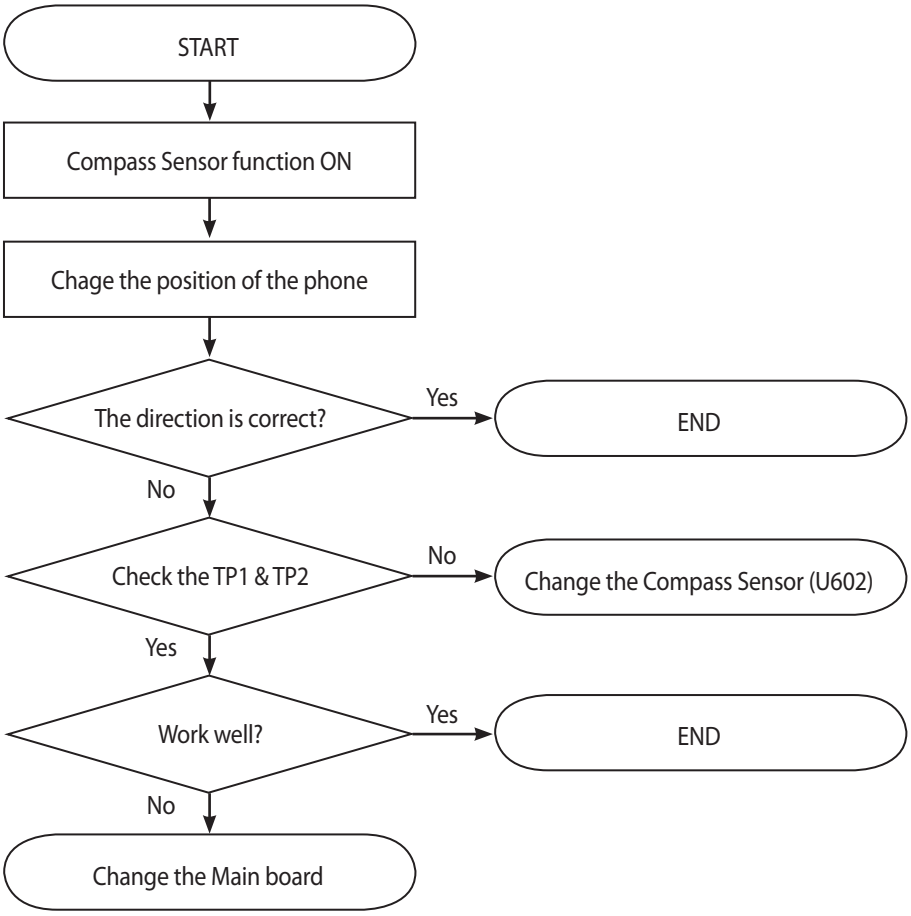

1) Measurement : Main board
-. VREG_COMPASS_2.7V : 2.7V
-. COMPASS_I2C_SDA
-. COMPASS_I2C_SCL

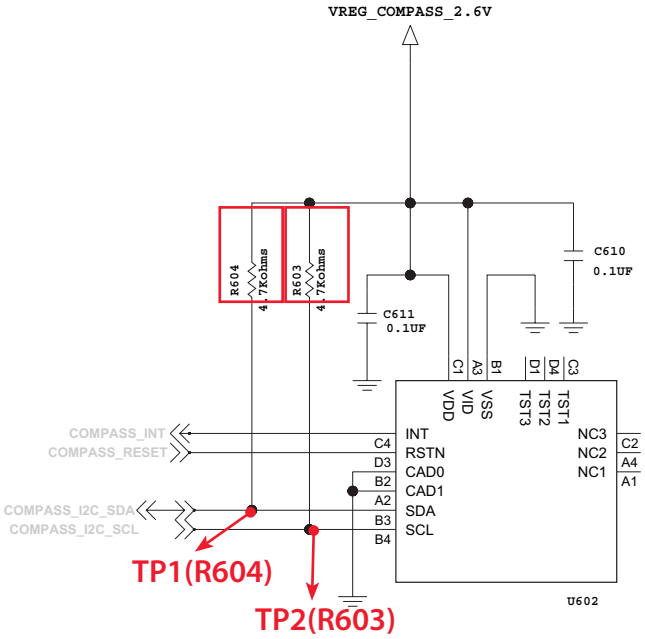

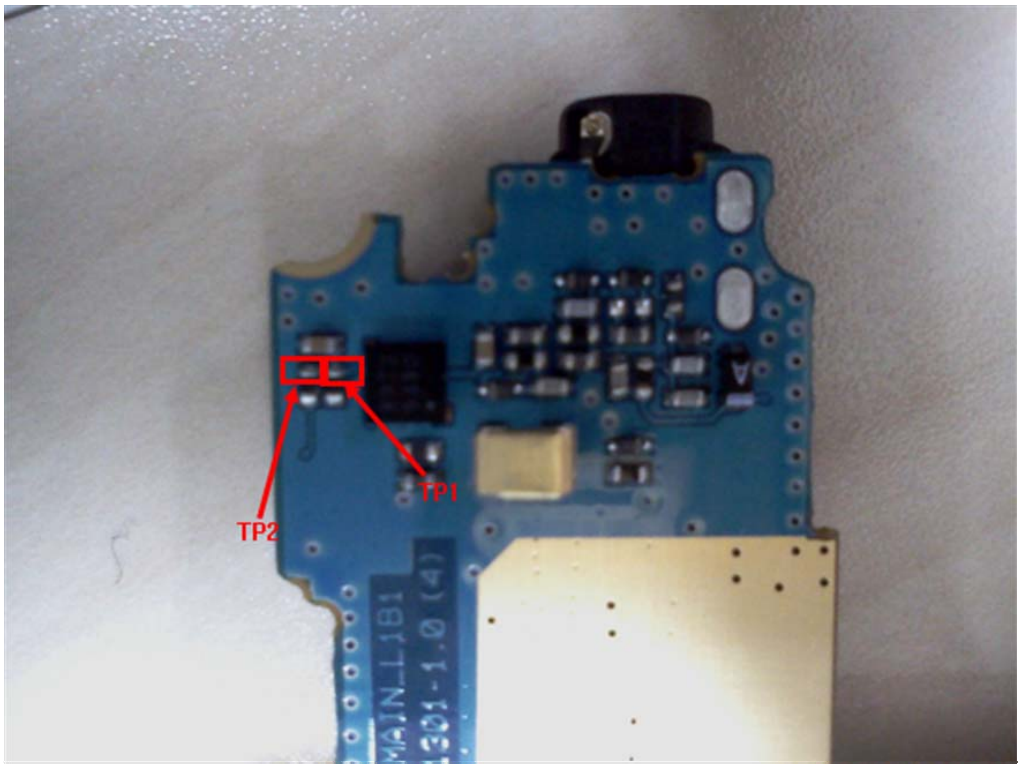

5. Download

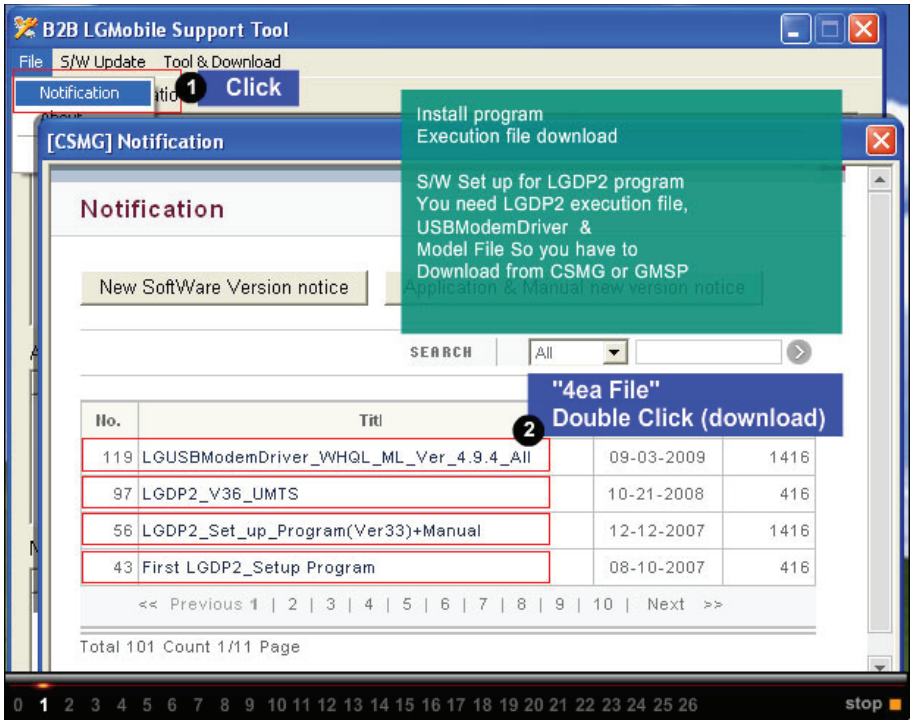

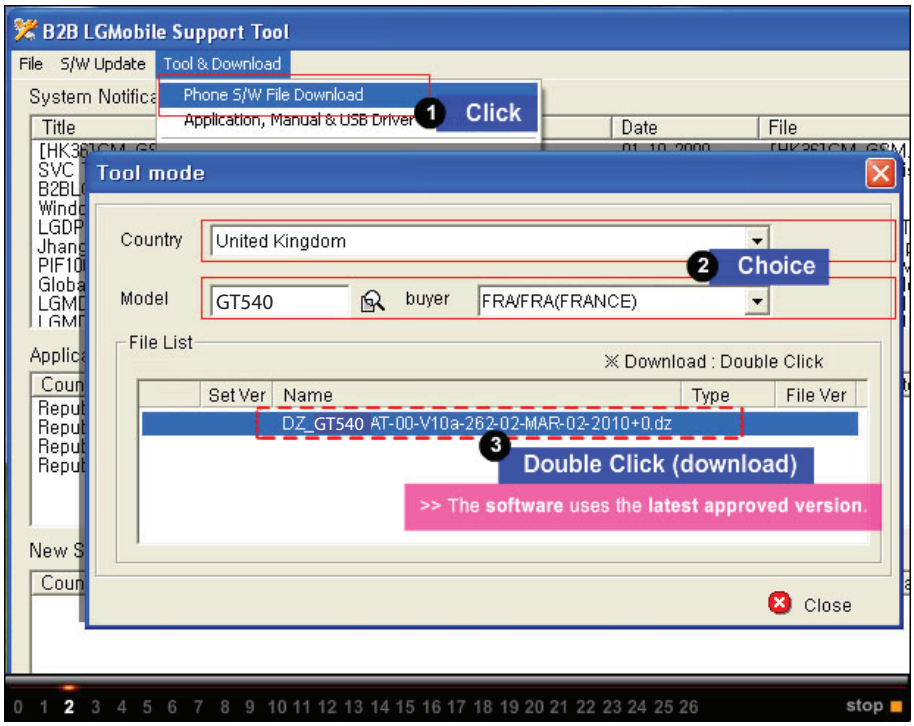

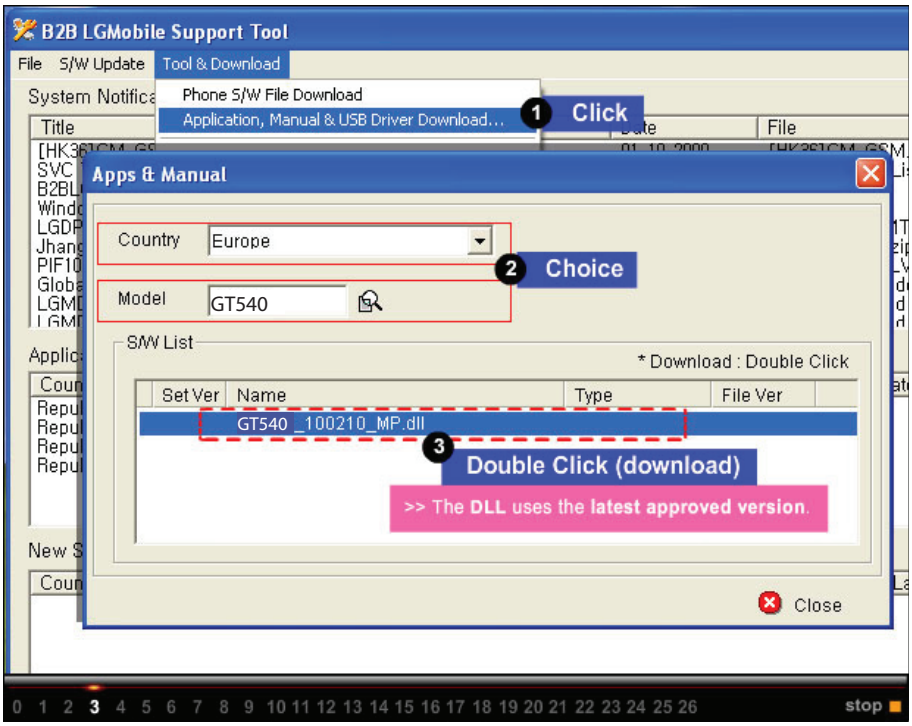

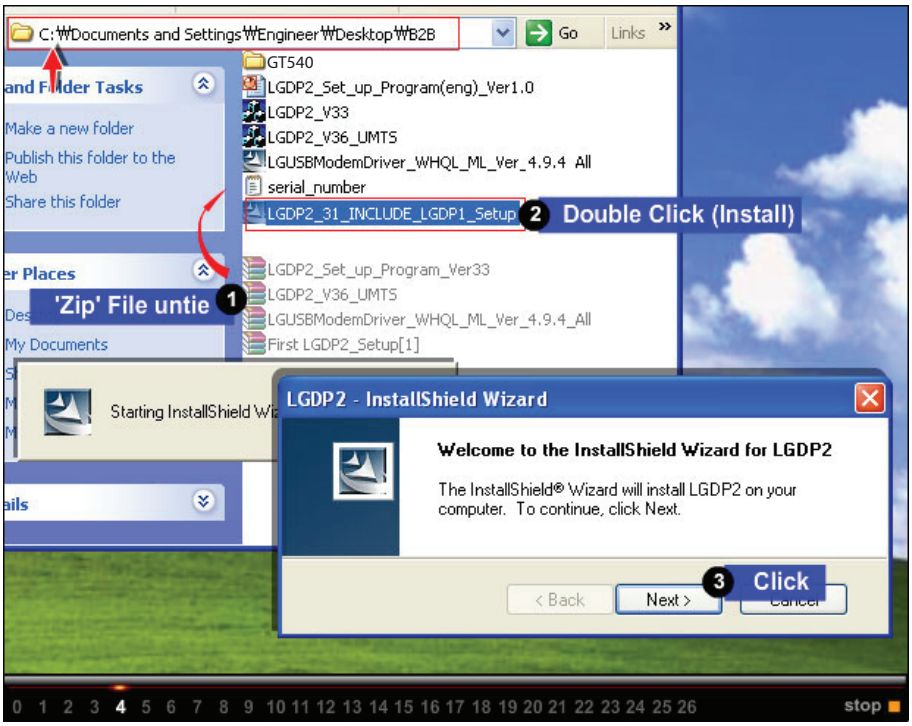

5. Download

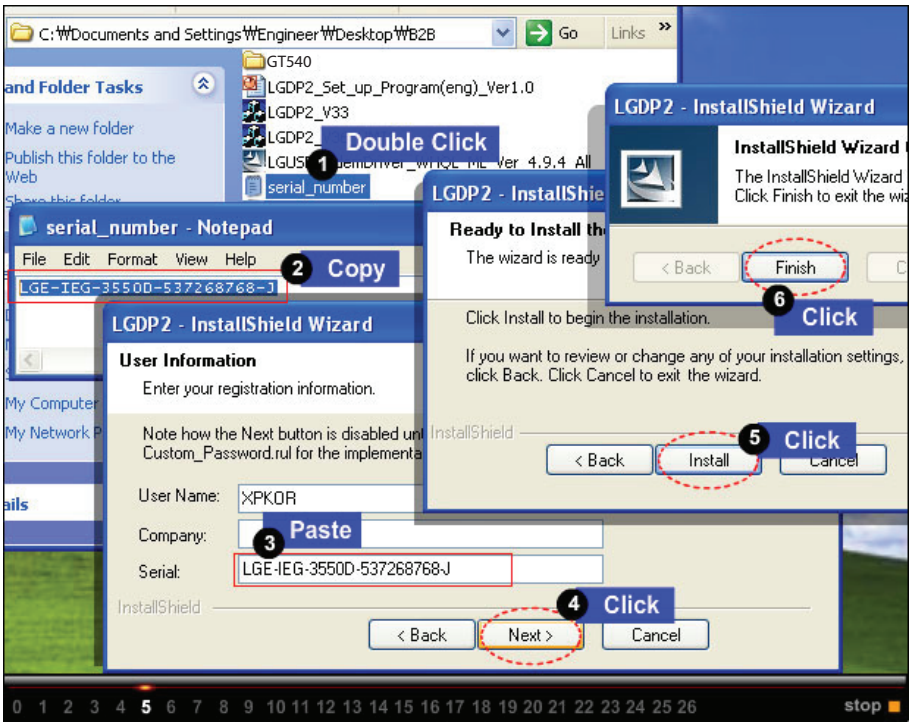

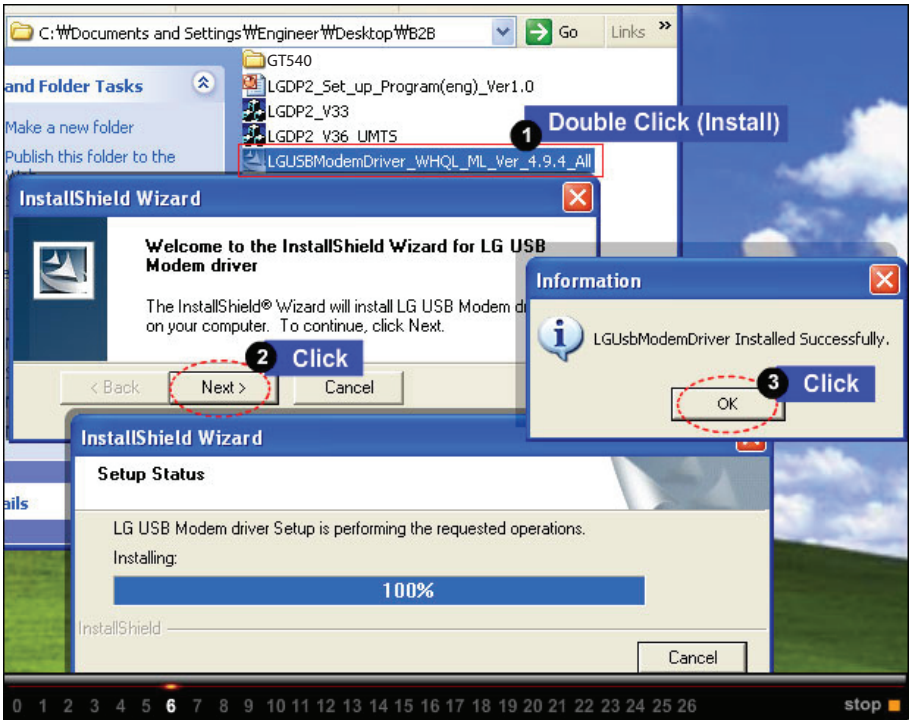

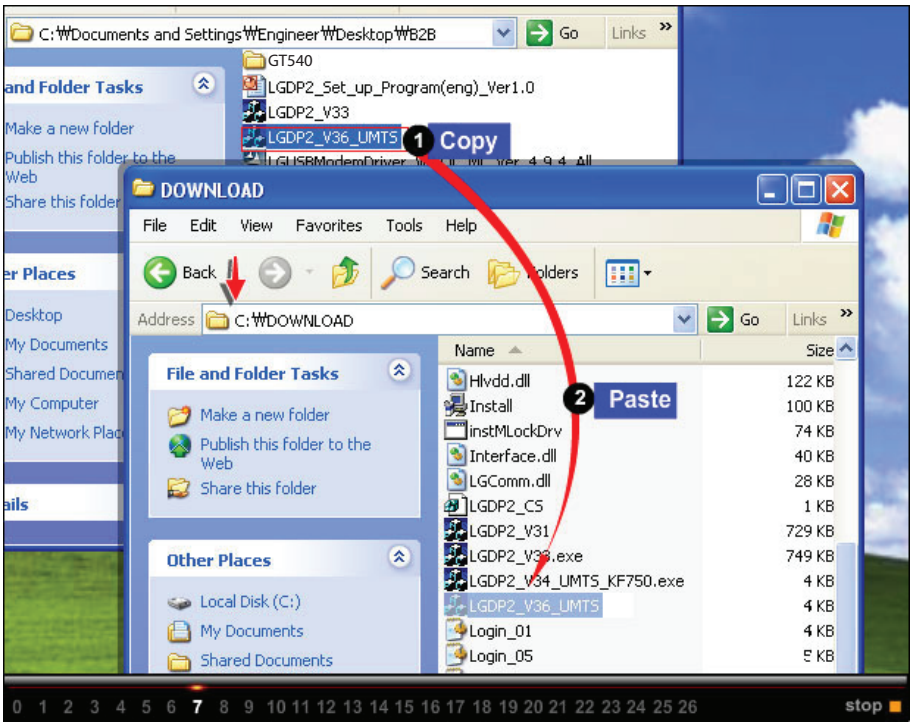

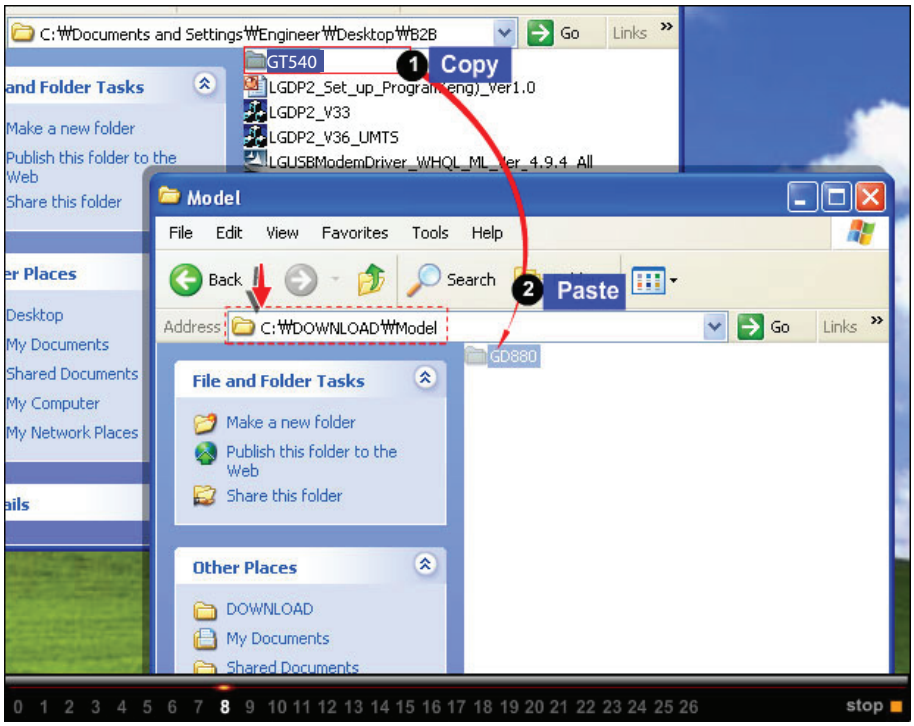

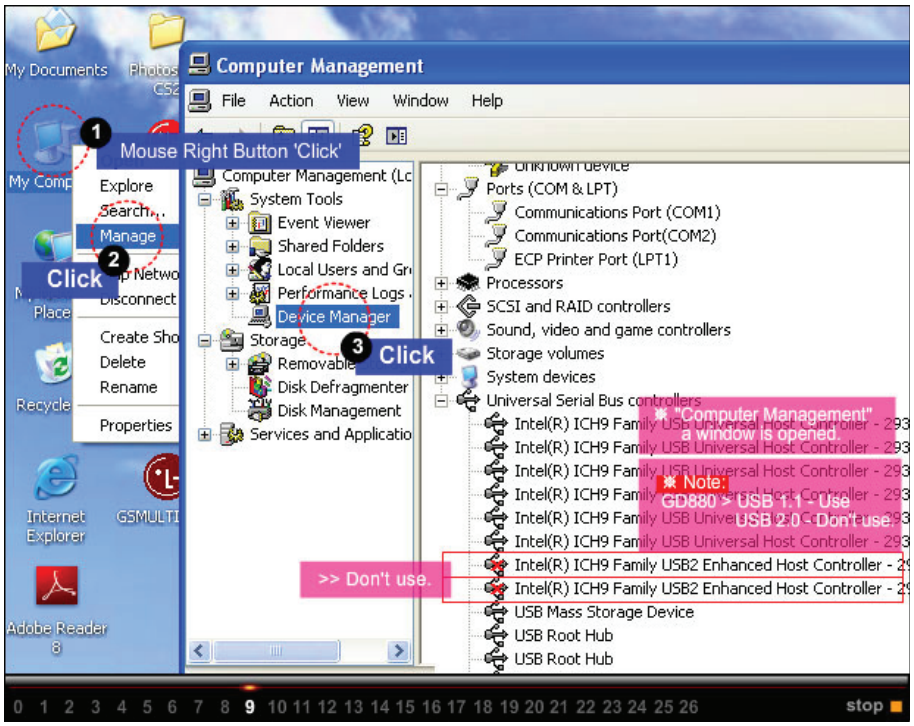

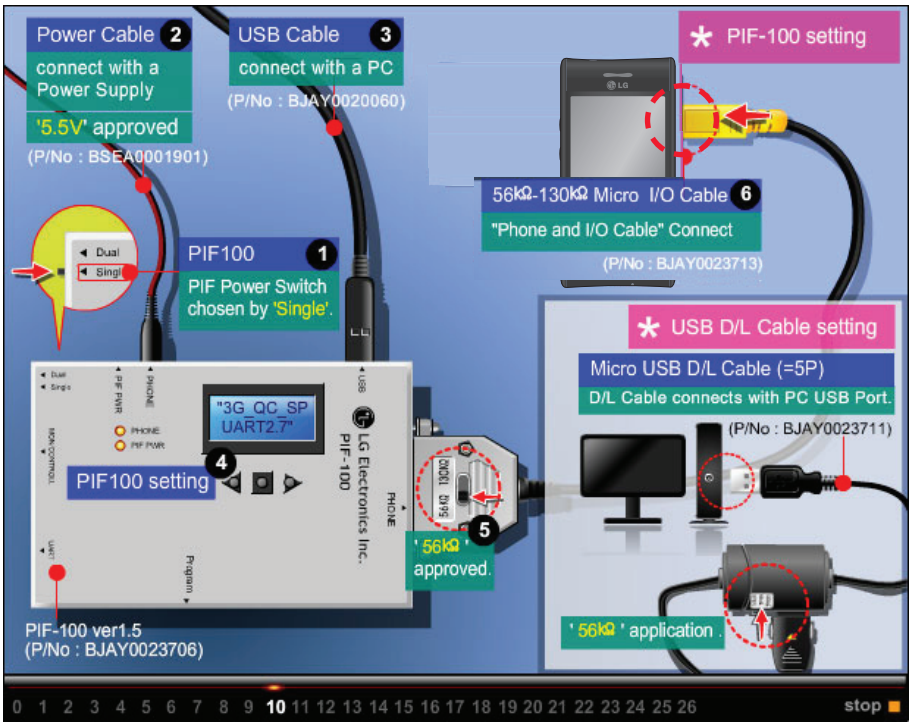

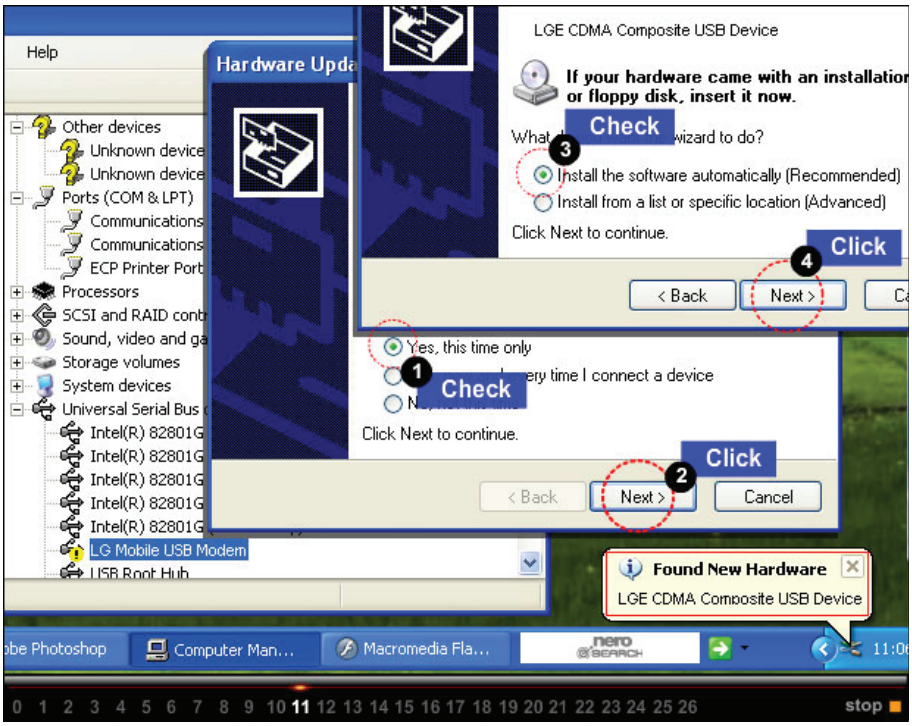

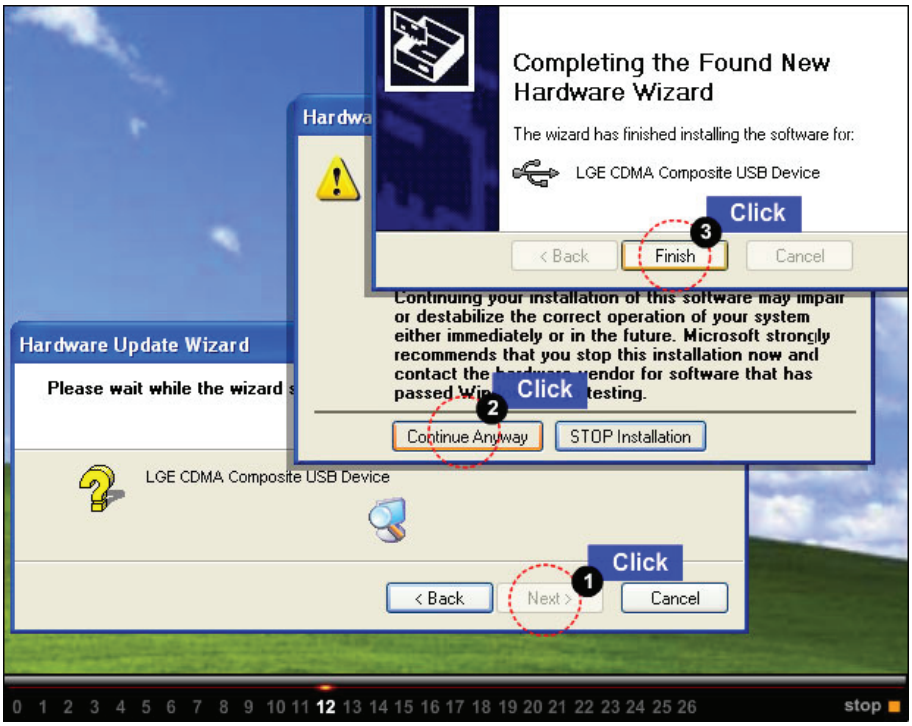

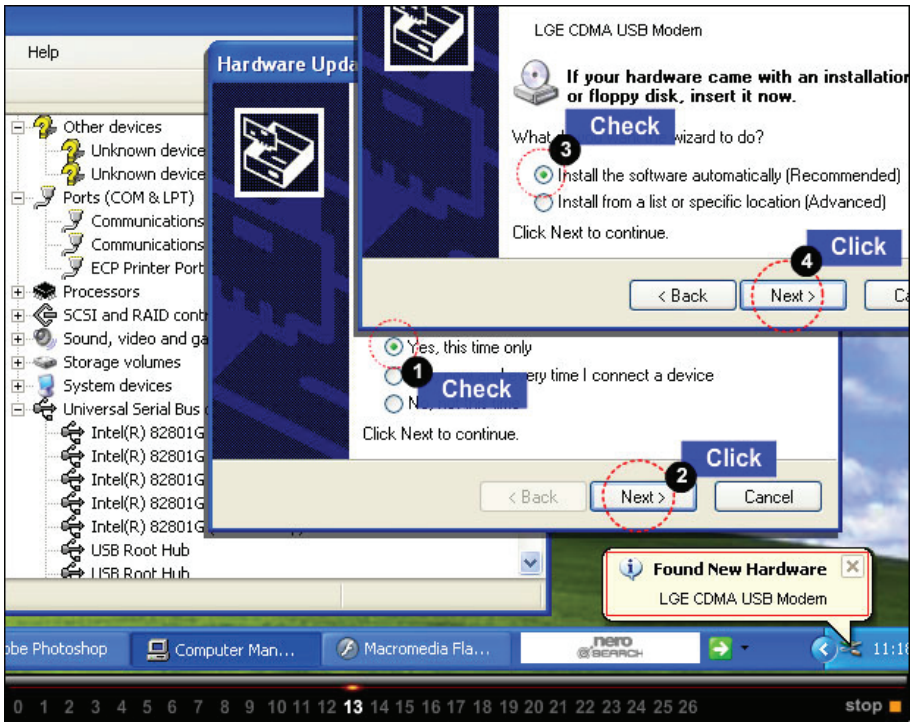

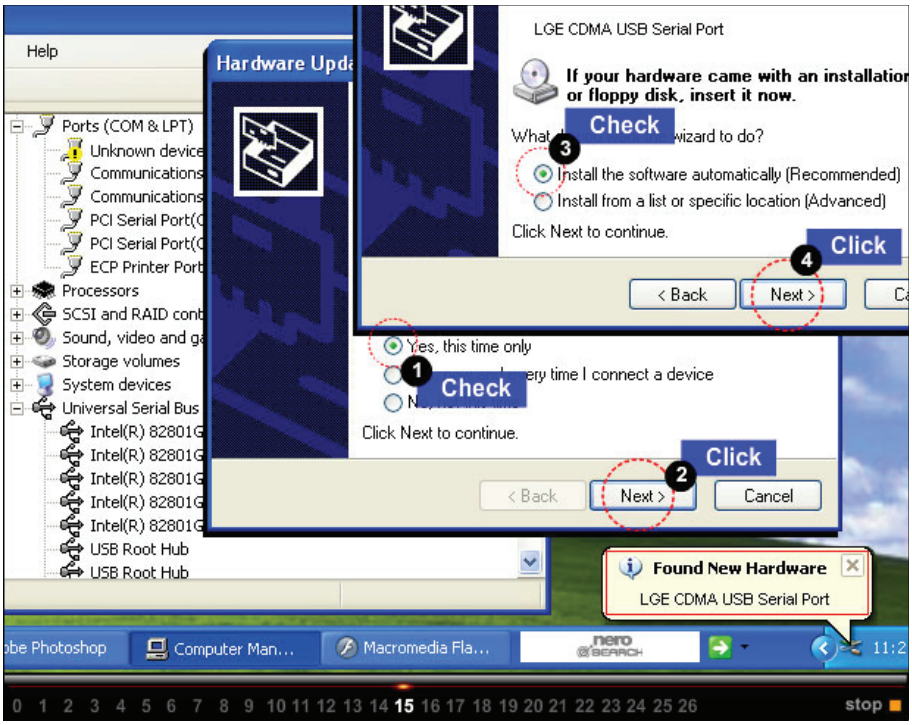

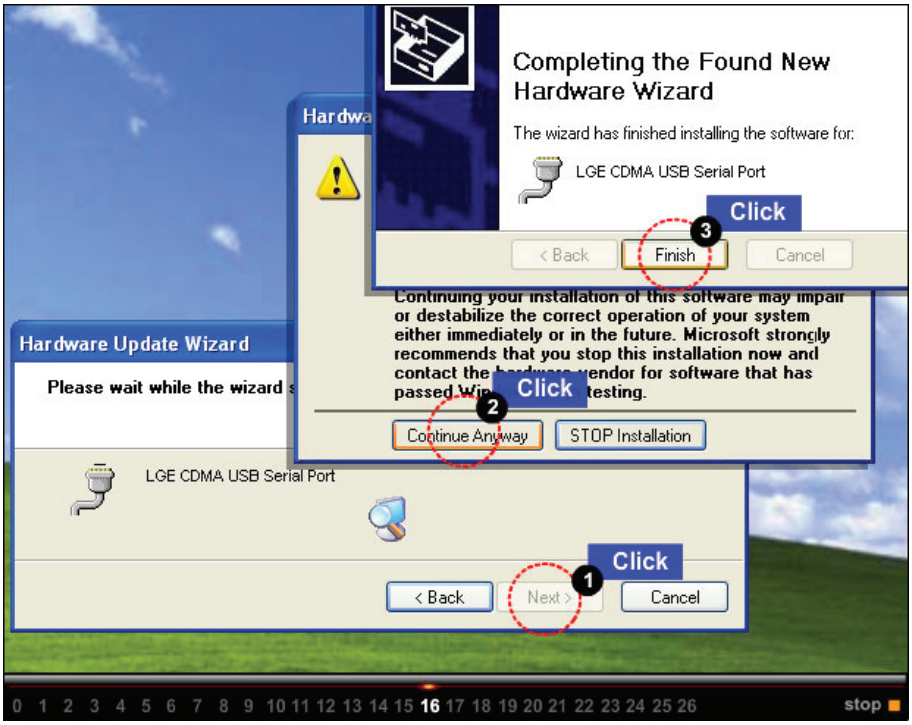

5. Download

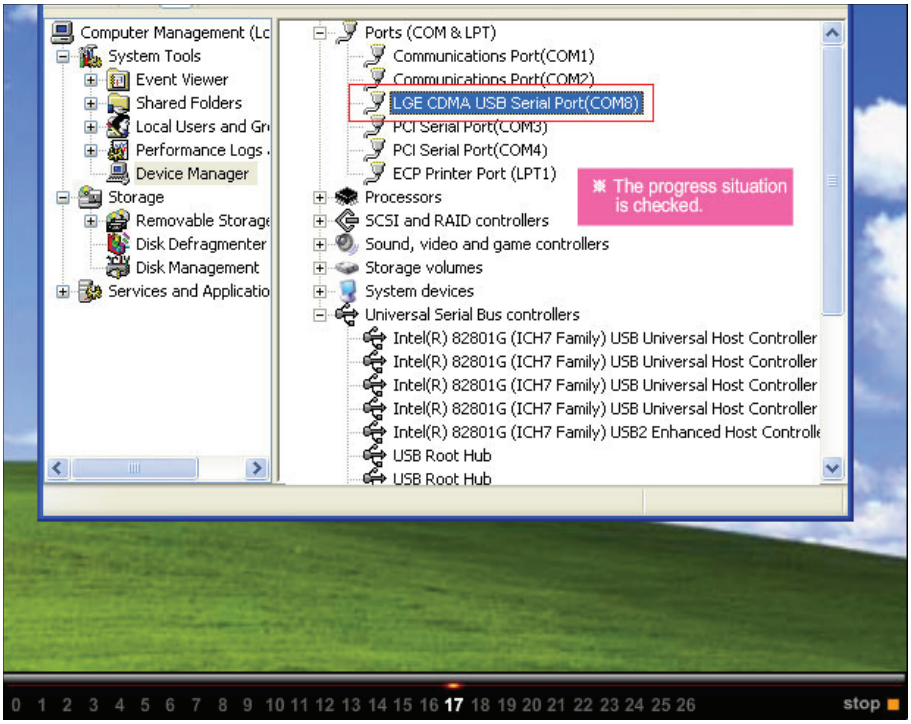

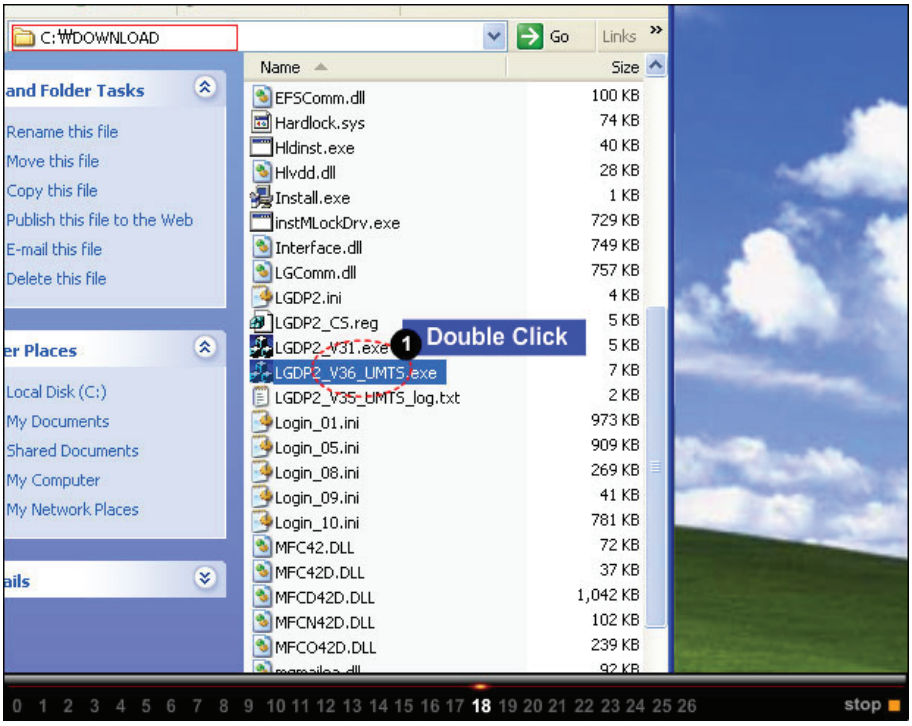

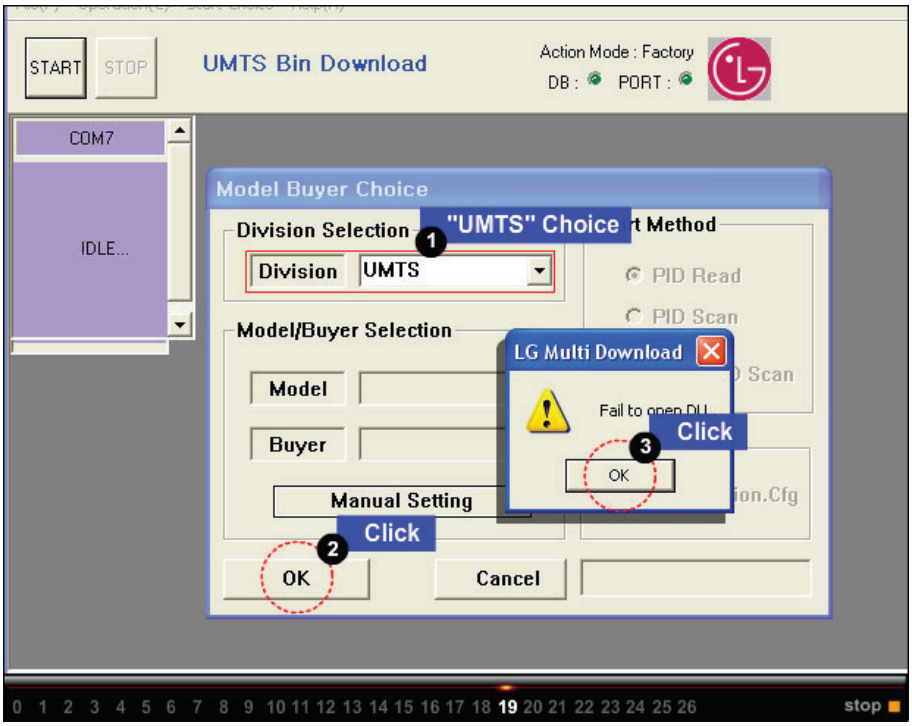

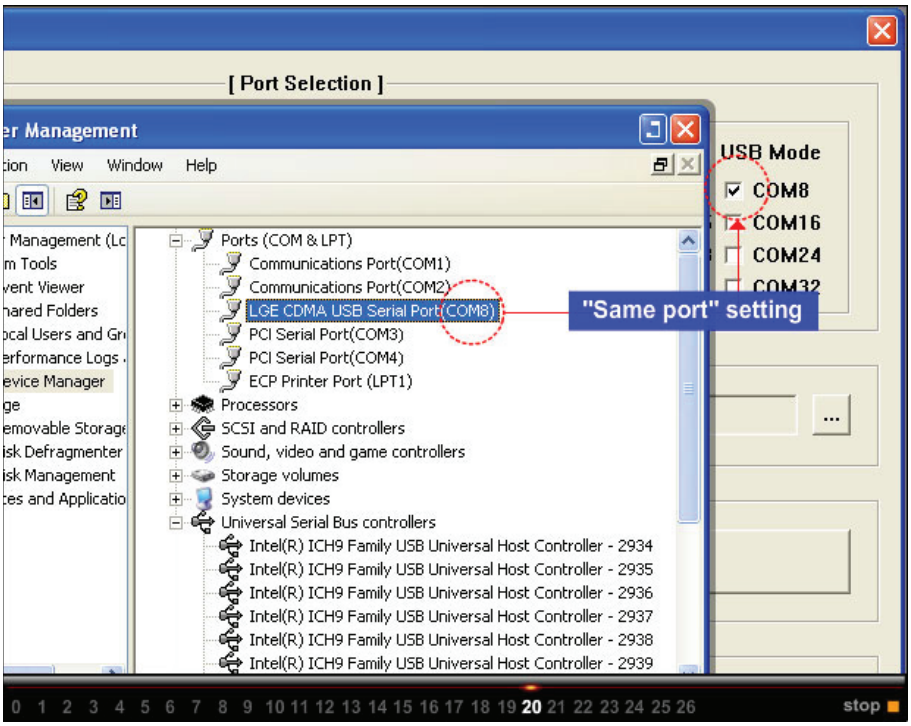

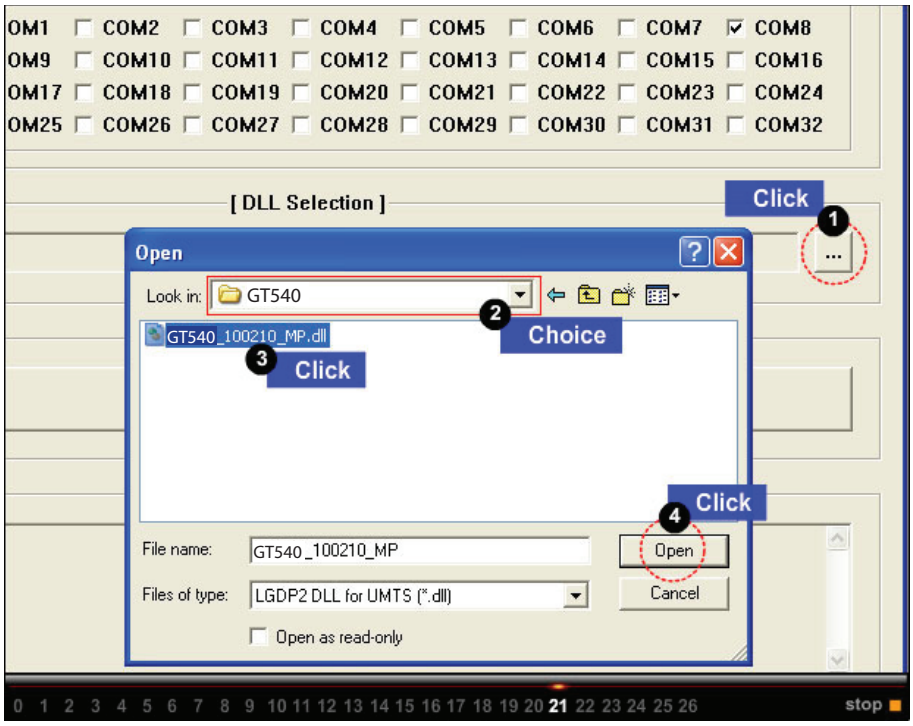

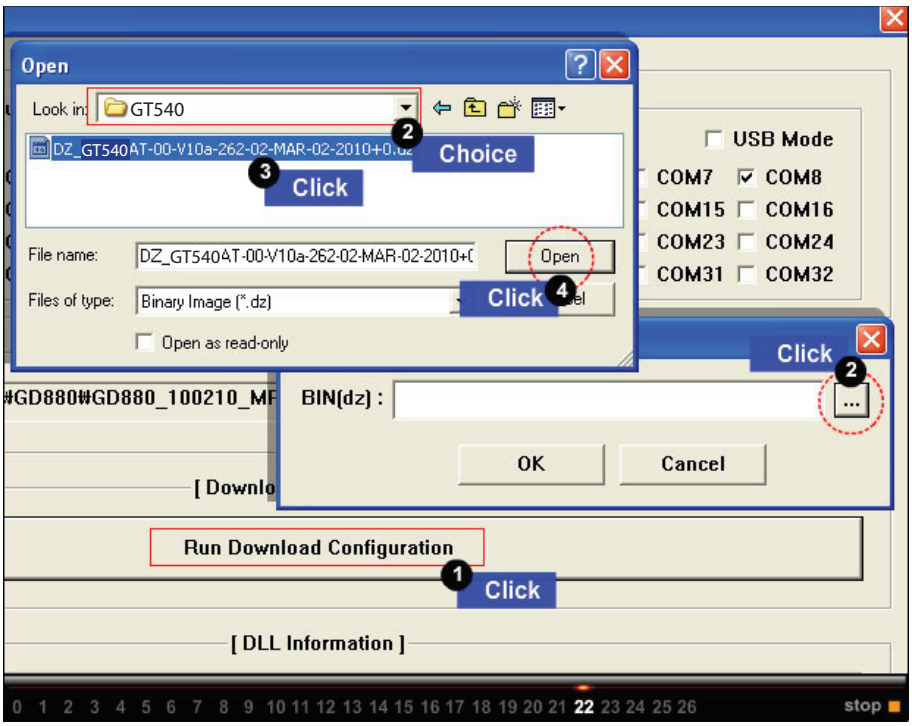

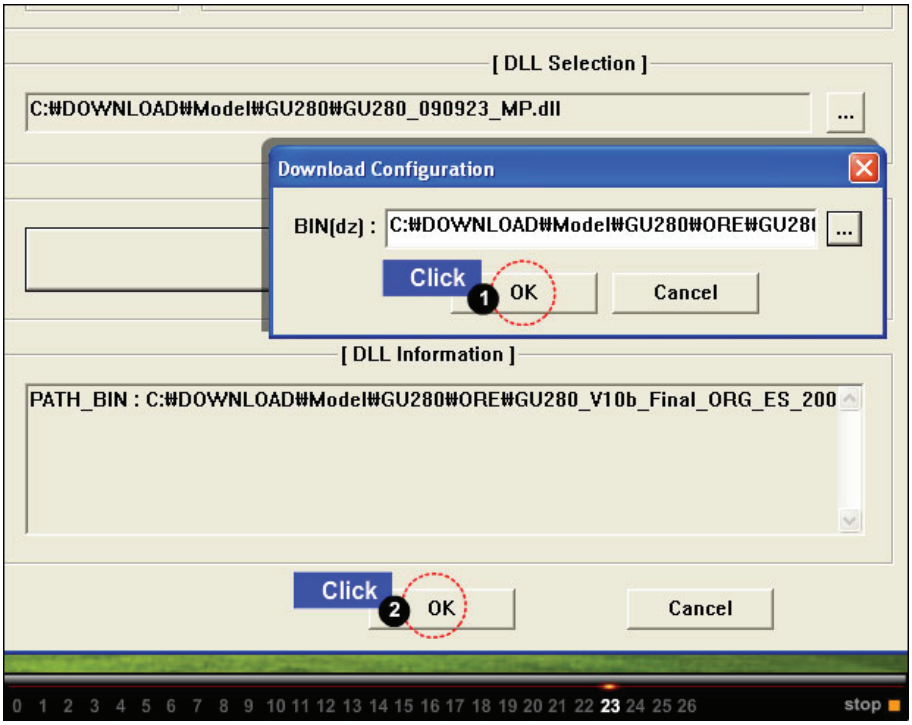

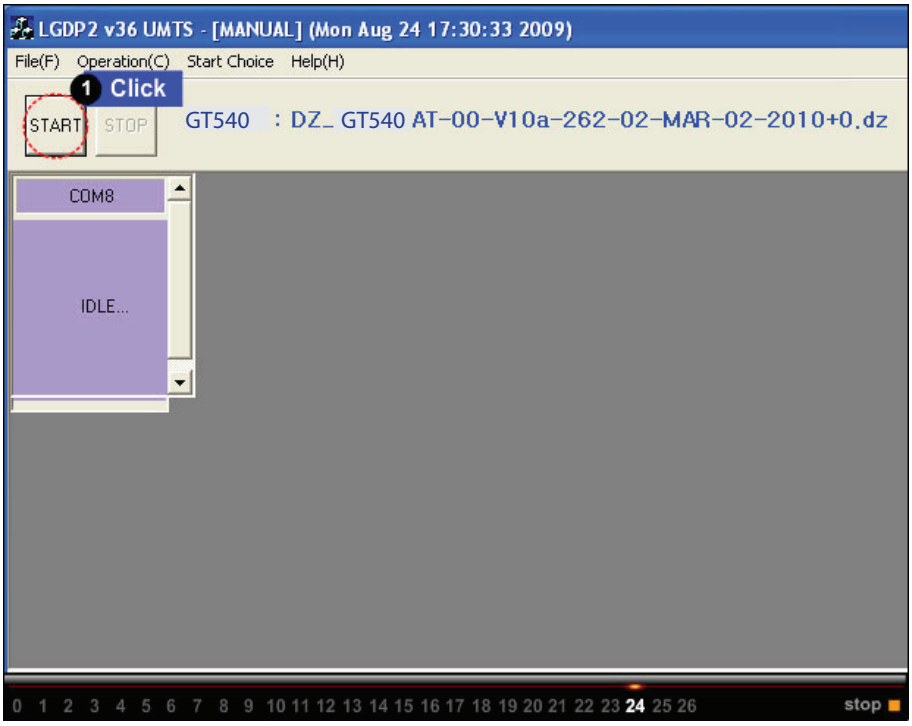

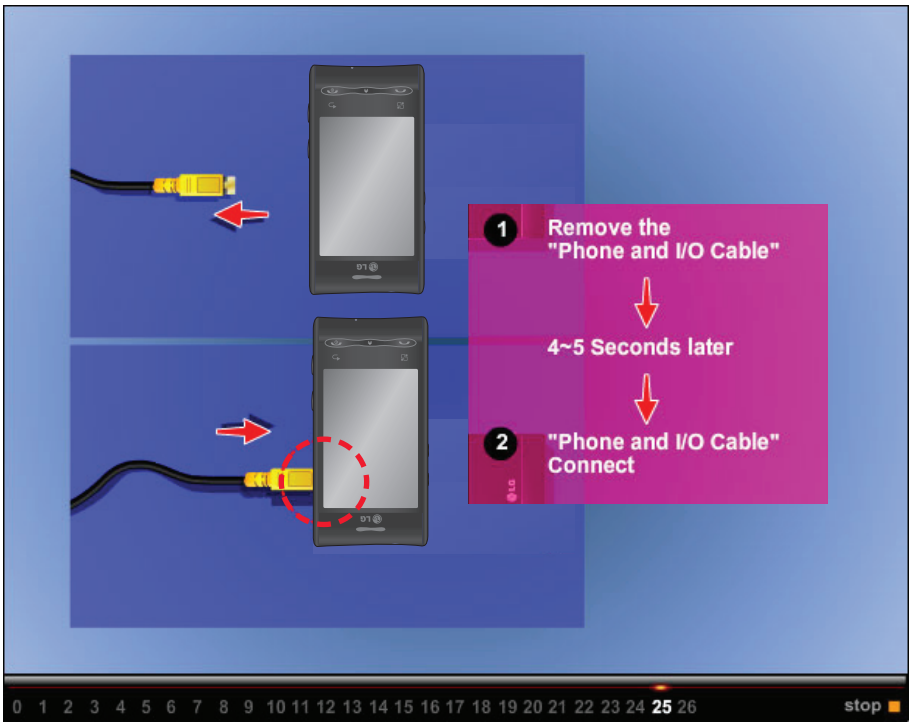

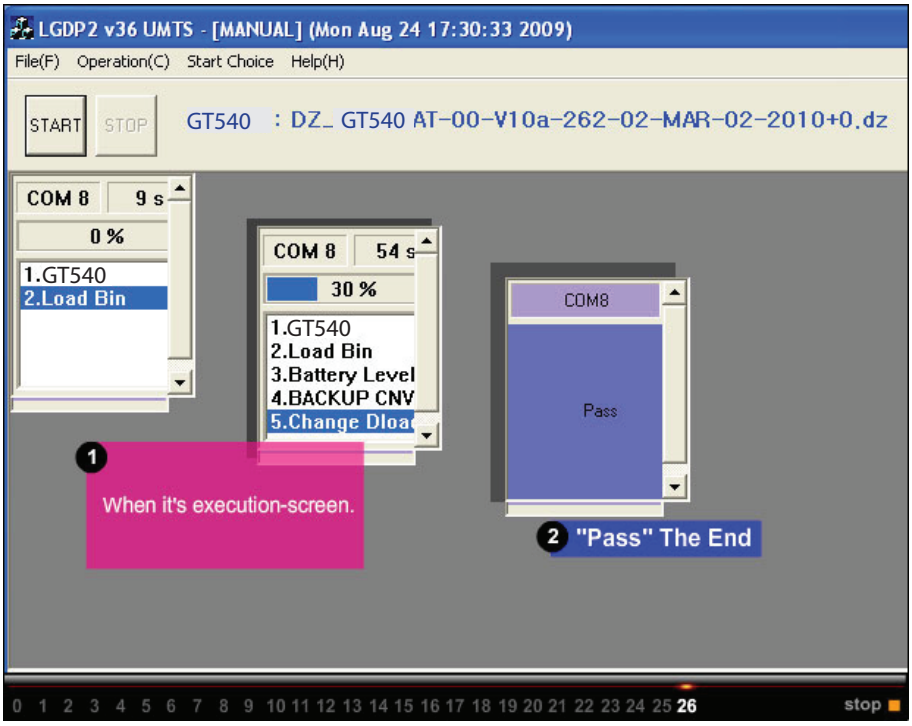

6. Block diagram

Swift System Block Diagram

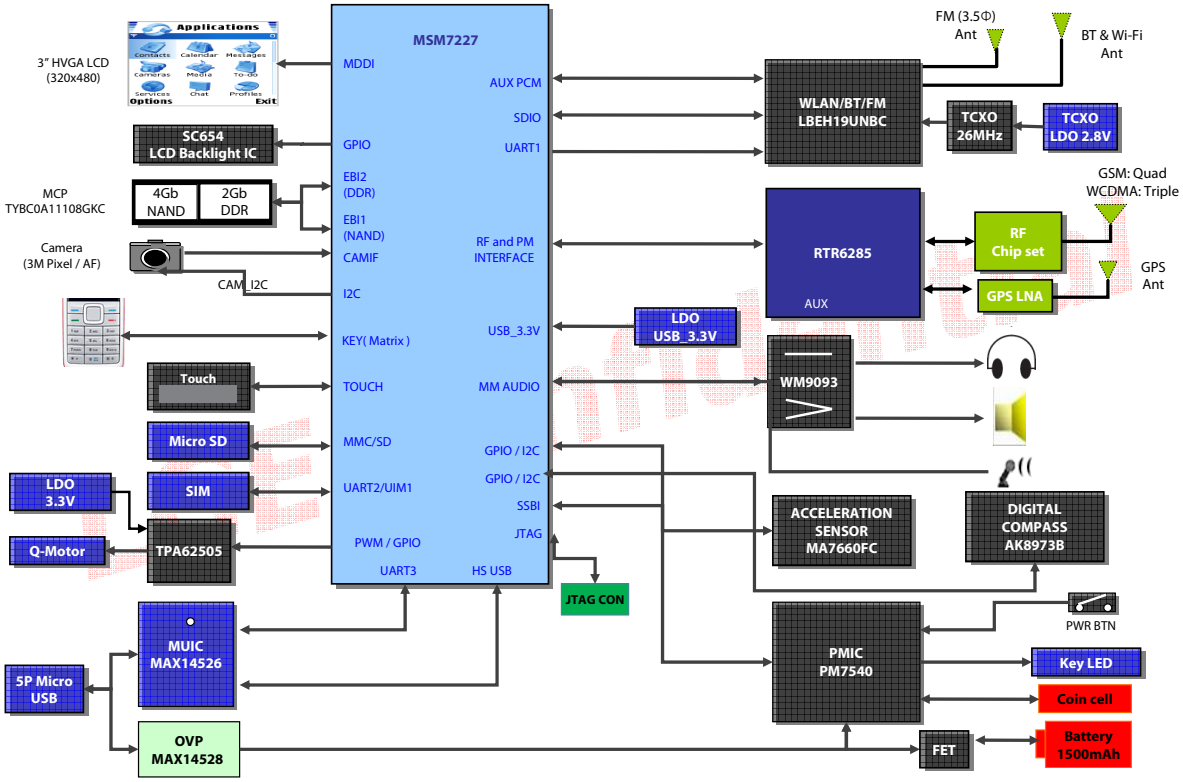

6. Block diagram

Swift RF Block Diagram

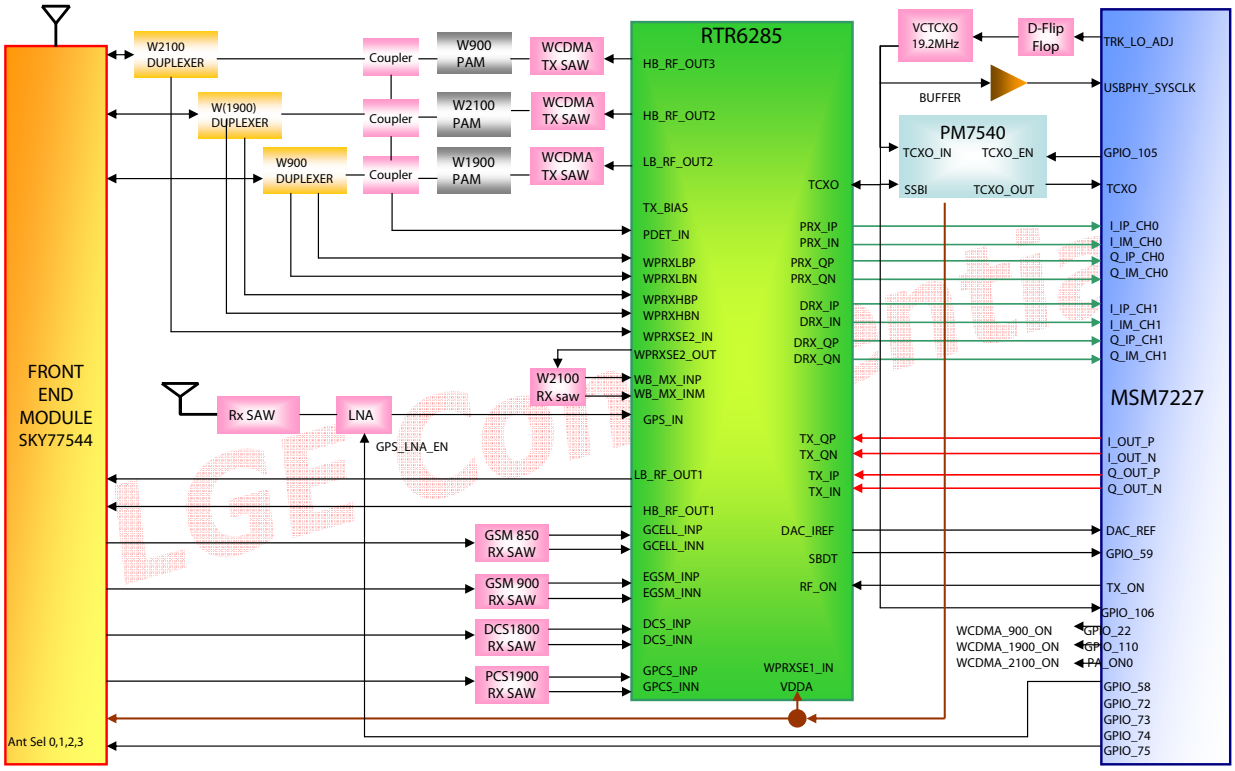

Swift Power Block Diagram

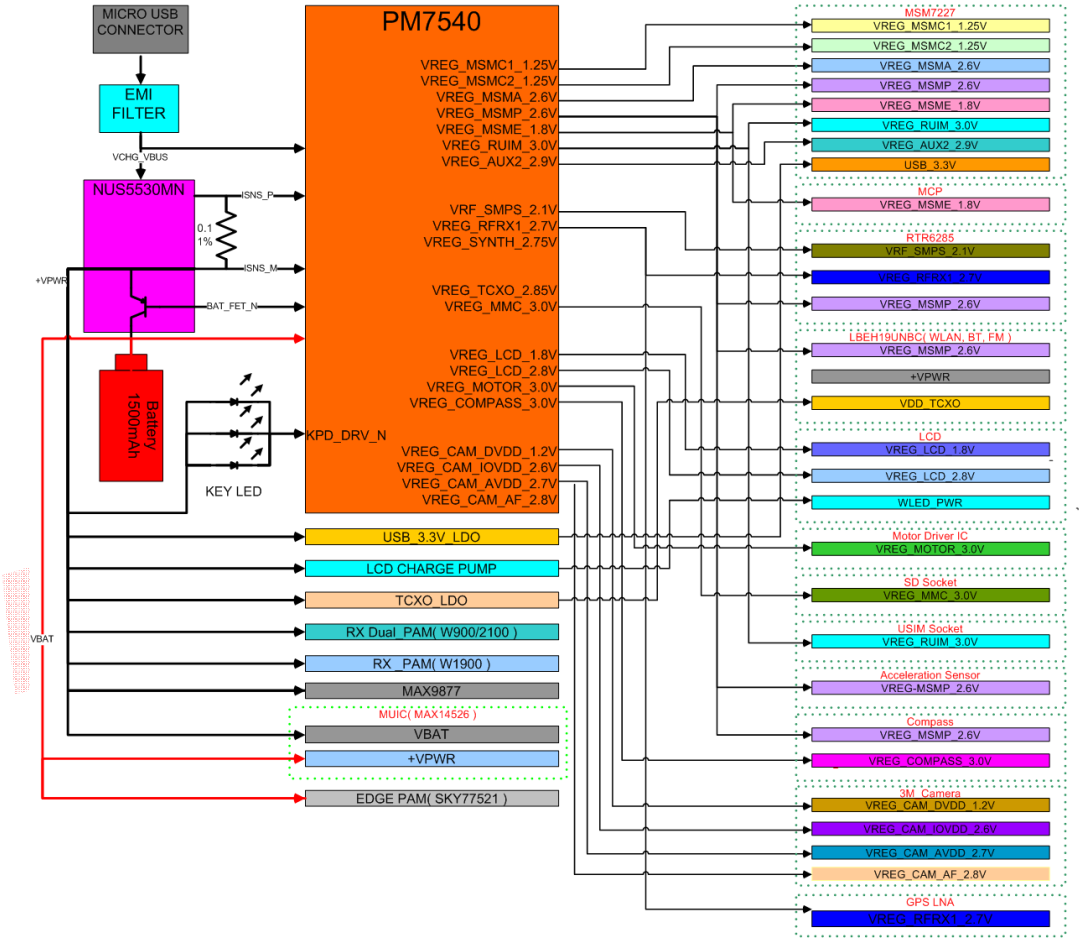

Swift LCD & CAMERA Interface

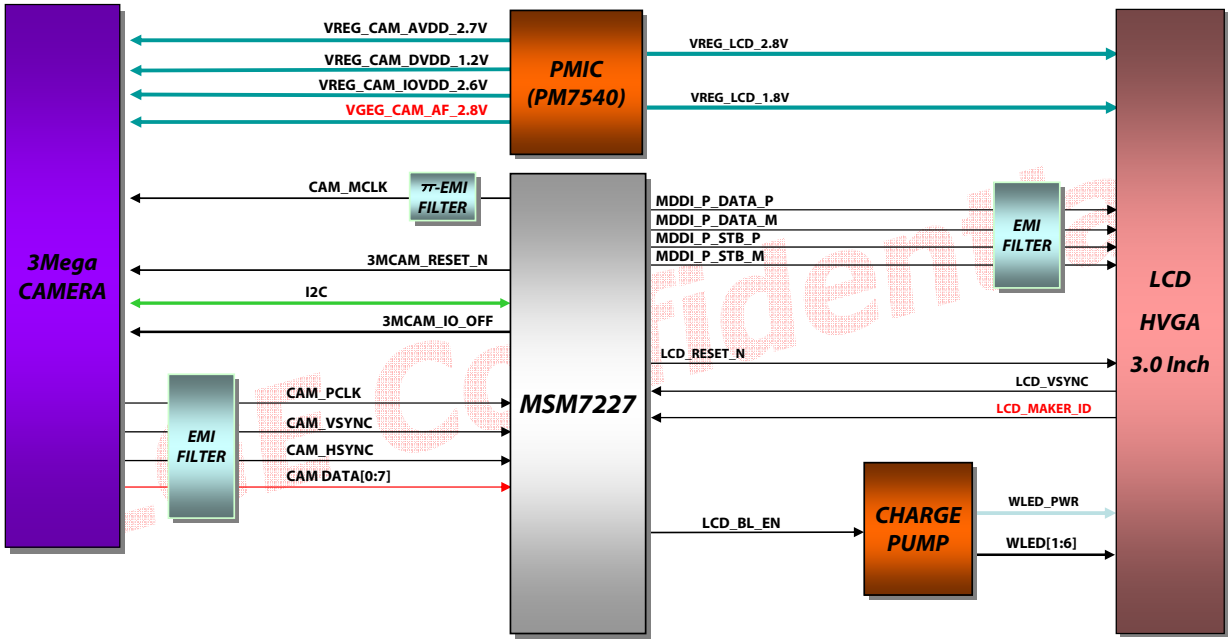

Swift Audio Interface

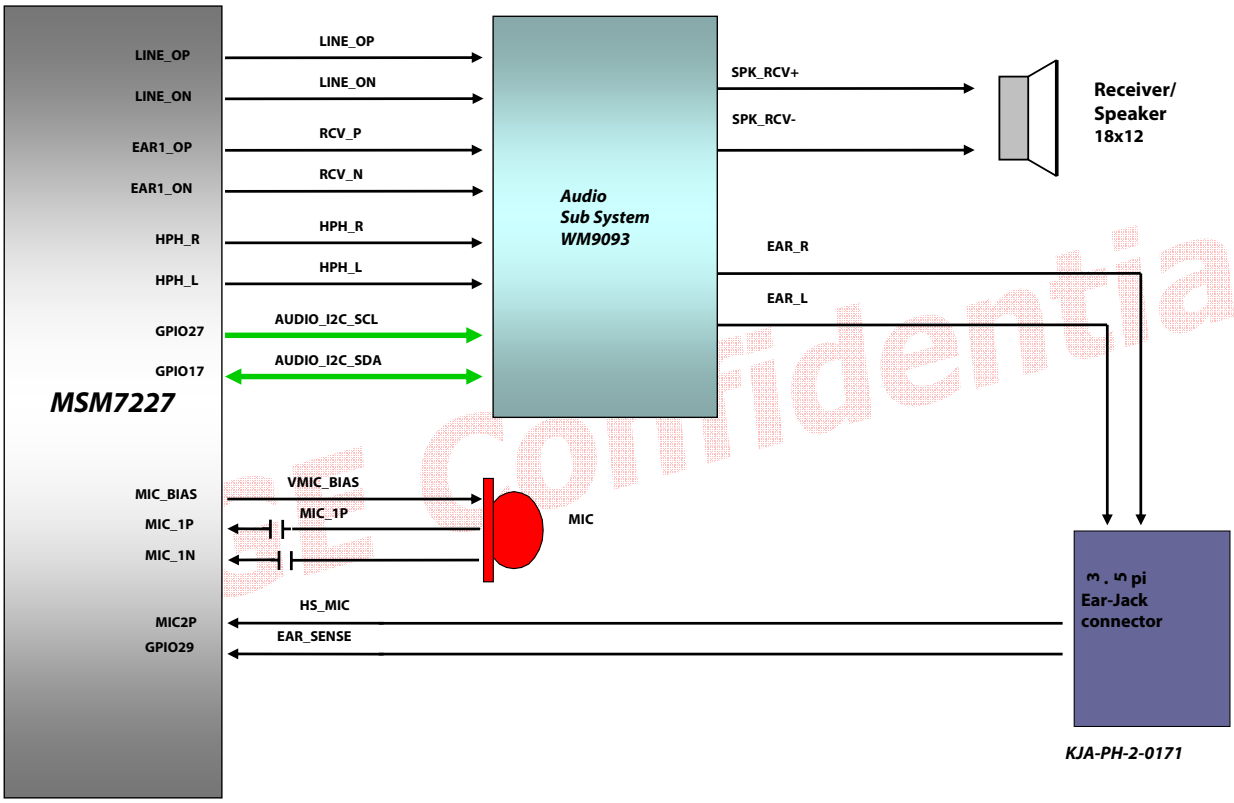

Swift WLAN/BT/FM Interface

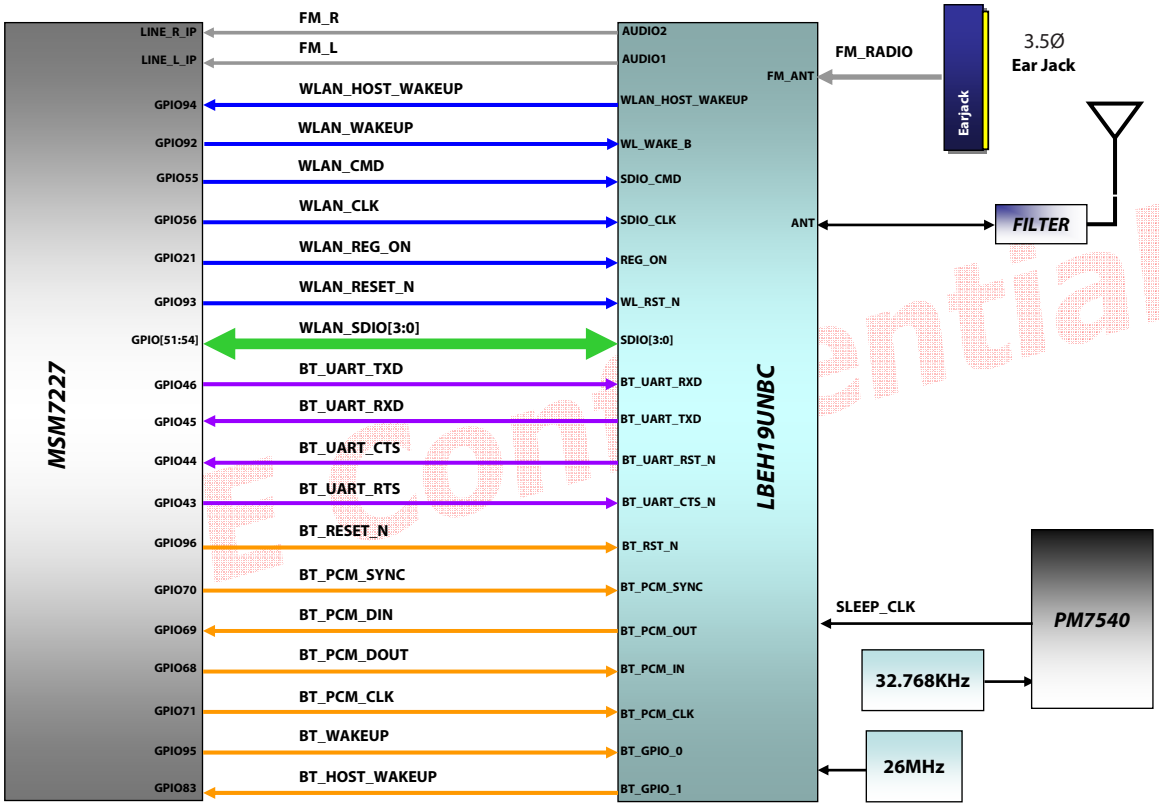

Swift Sensor/ Motor Interface

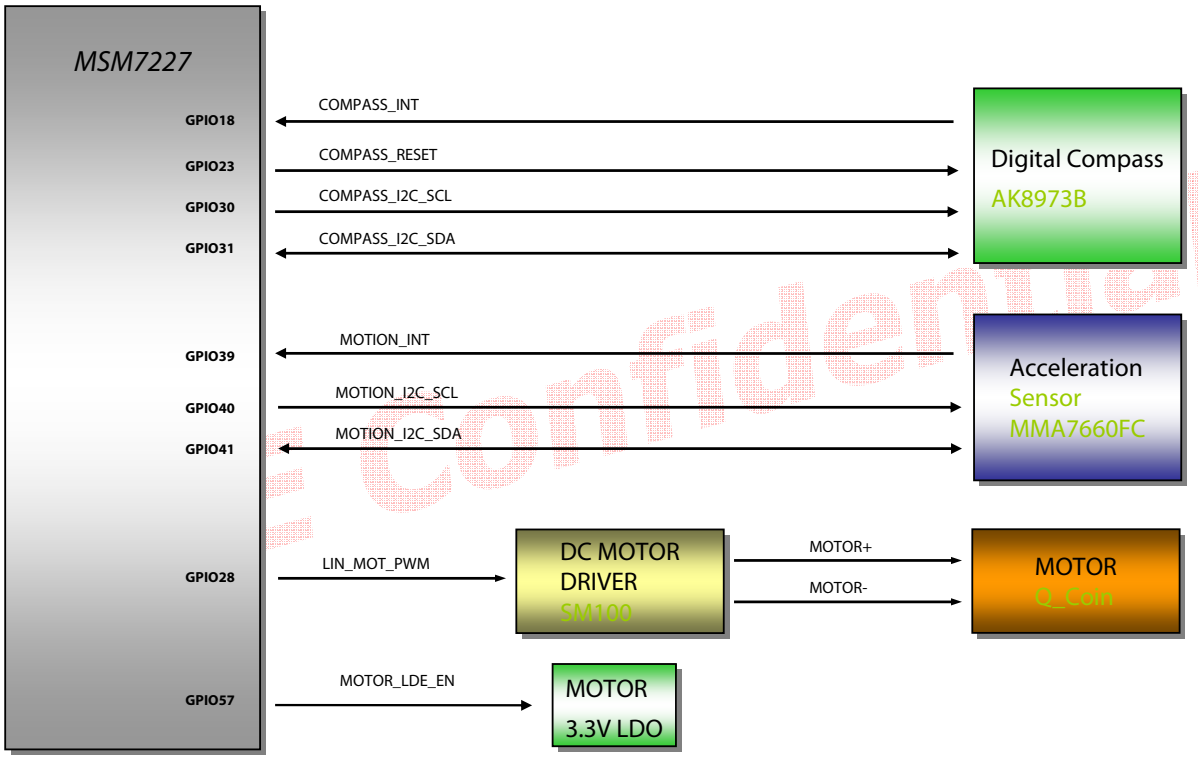

7. Circuit diagram

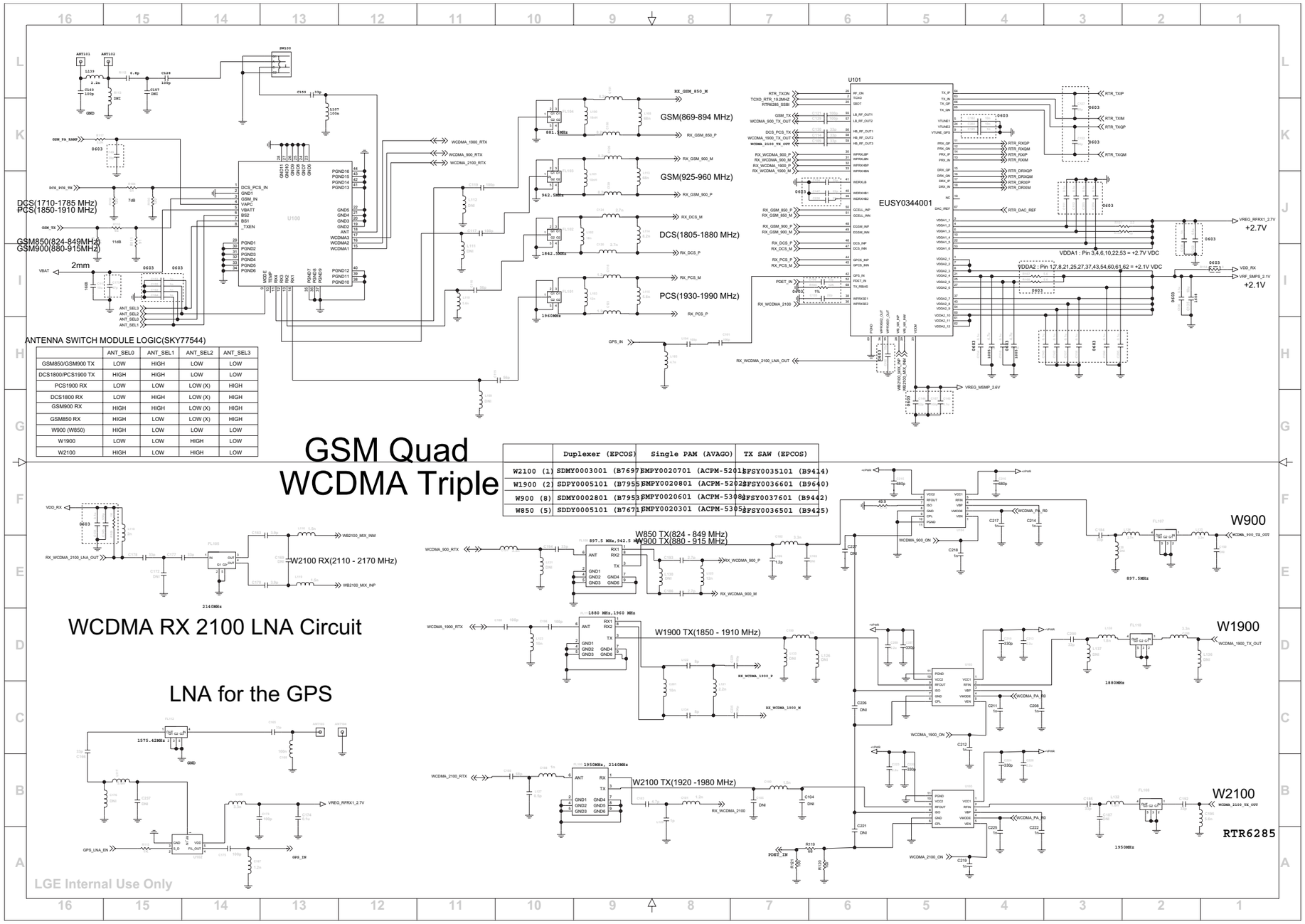

	ANT_SEL0	ANT_SEL1	ANT_SEL2	ANT_SEL3
GSM850/GSM900 TX	LOW	HIGH	LOW	LOW
DCS1800/PCS1900 TX	HIGH	HIGH	LOW	LOW
PCS1900 RX	LOW	LOW	LOW (X)	HIGH
DCS1800 RX	LOW	HIGH	LOW (X)	HIGH
GSM900 RX	HIGH	HIGH	LOW (X)	HIGH
GSM850 RX	HIGH	LOW	LOW (X)	HIGH
W900 (W850)	HIGH	LOW	LOW	LOW
W1900	LOW	LOW	HIGH	LOW
W2100	HIGH	LOW	HIGH	LOW

	Duplexer (EPCOS)	Single PAM (AVAGO)	TX SAW (EPCOS)
W2100 (1)	SDMY0003001 (B7697)	SMPY0020701 (ACPM-5201)	SFSY0035101 (B9414)
W1900 (2)	SDPY0005101 (B7955)	SMPY0020801 (ACPM-5202)	SFSY0036601 (B9640)
W900 (8)	SDMY0002801 (B7953)	SMPY0020601 (ACPM-5308)	SFSY0037601 (B9442)
W850 (5)	SDDY0005101 (B7671)	SMPY0020301 (ACPM-5305)	SFSY0036501 (B9425)

7. Circuit diagram

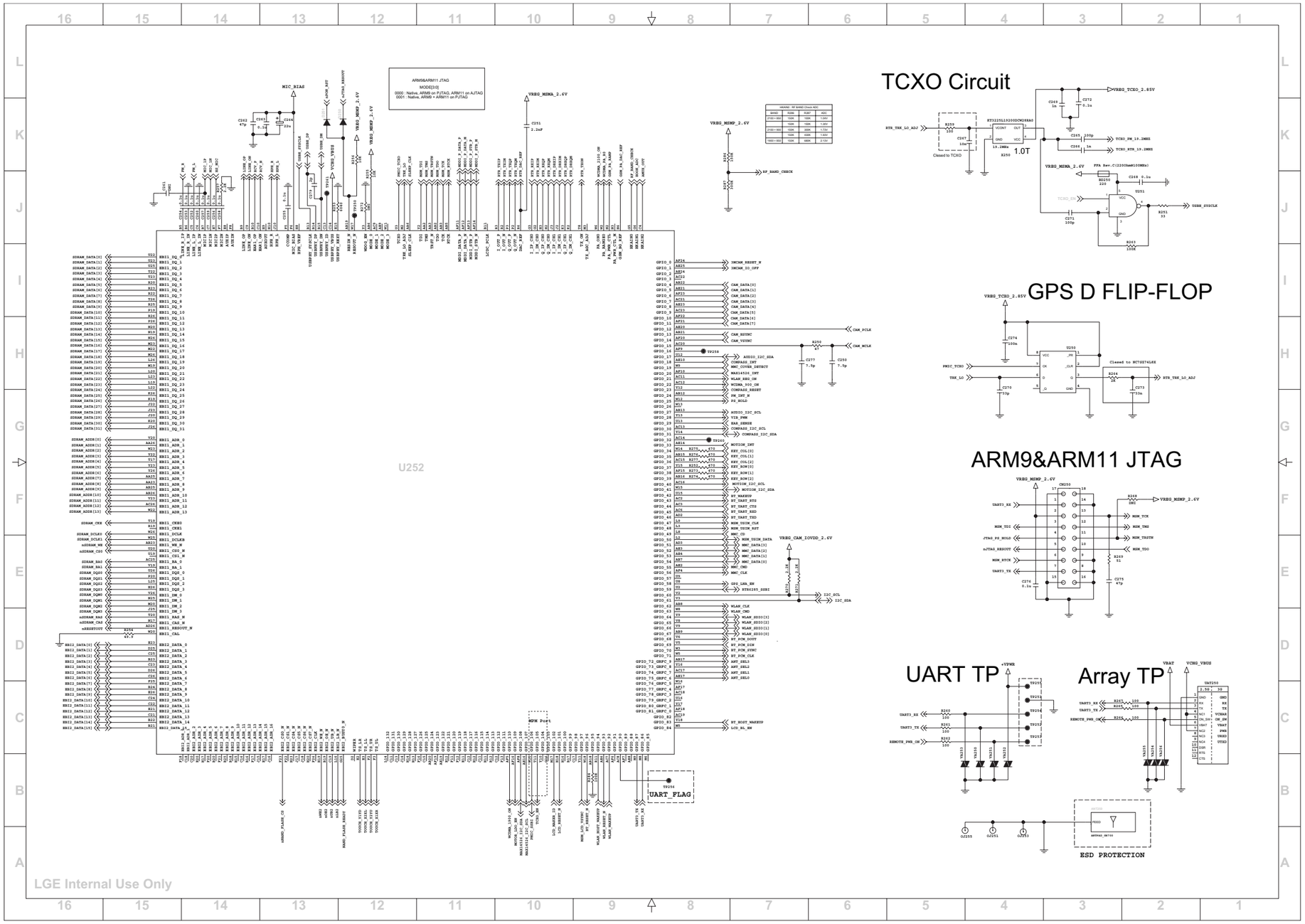

7. Circuit diagram

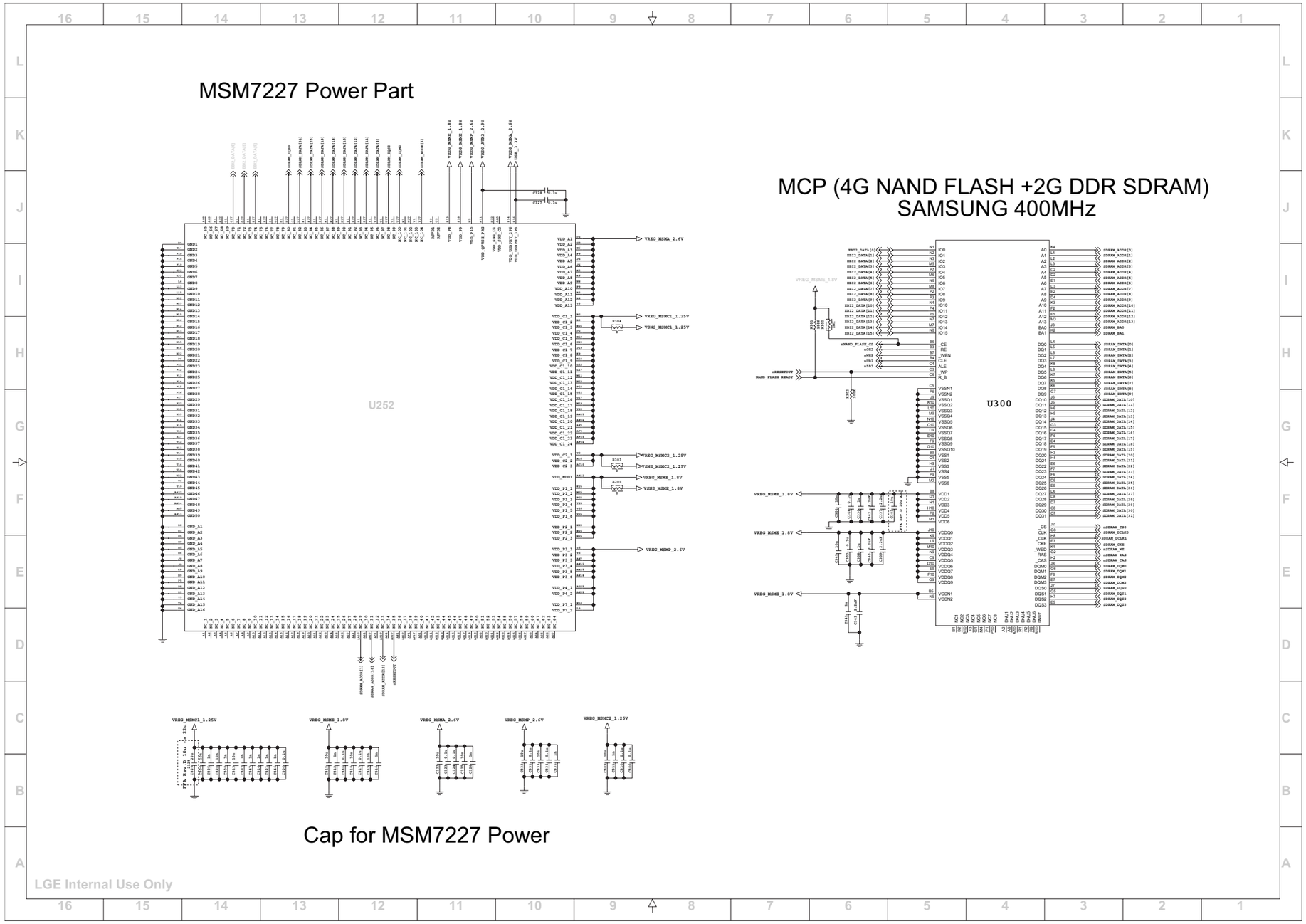

7. CIRCUIT DIAGRAM

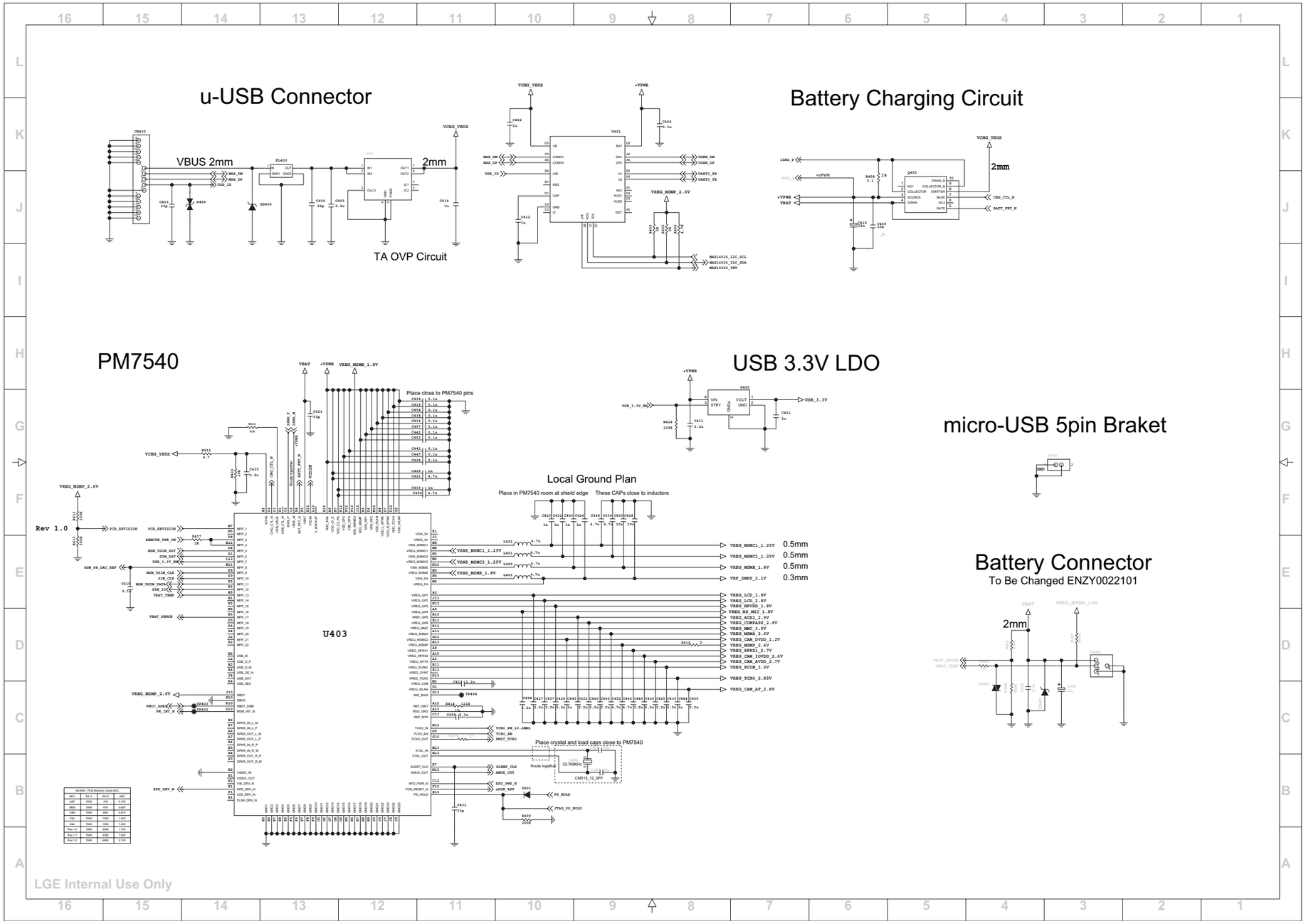

7. CIRCUIT DIAGRAM

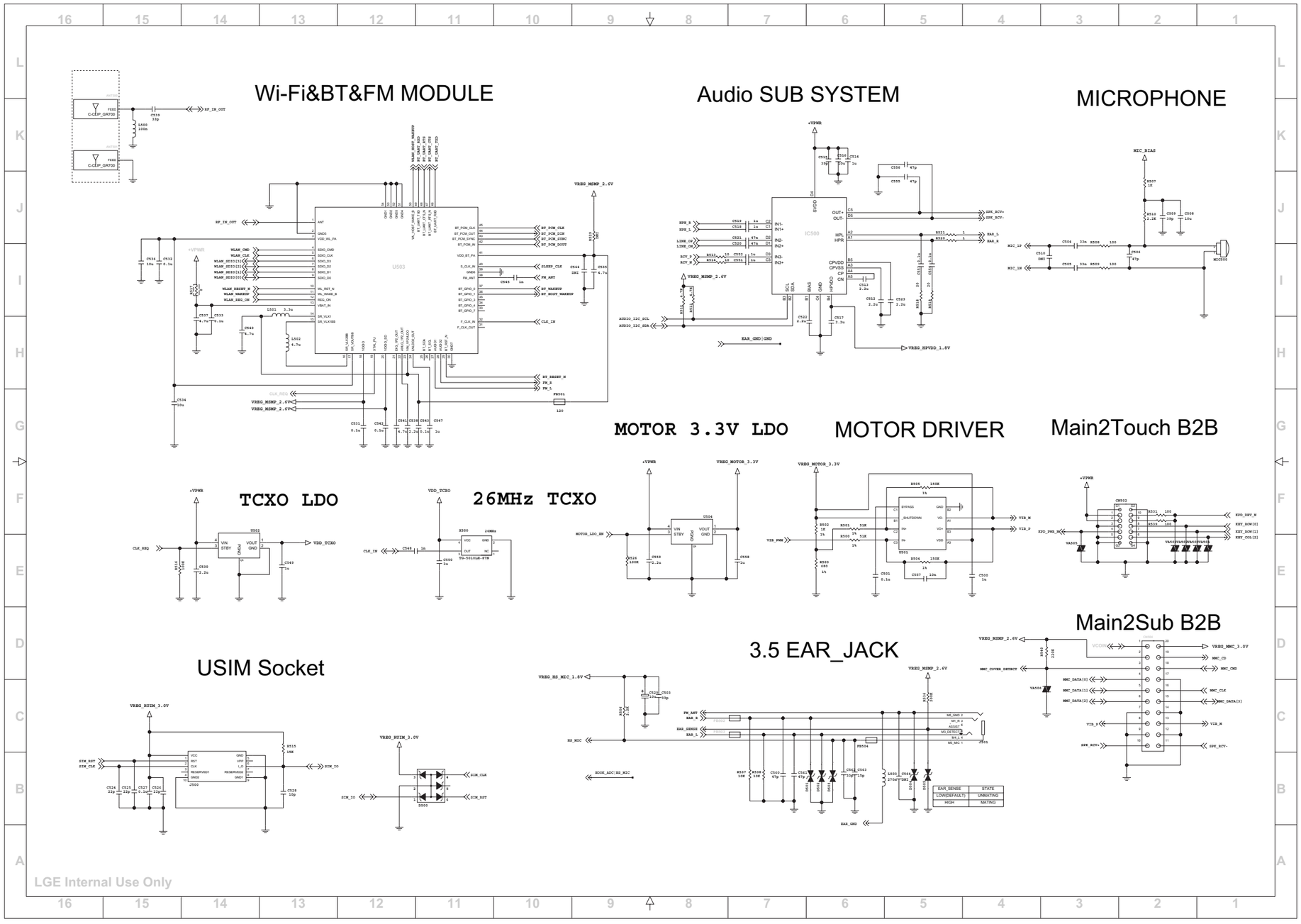

7. CIRCUIT DIAGRAM

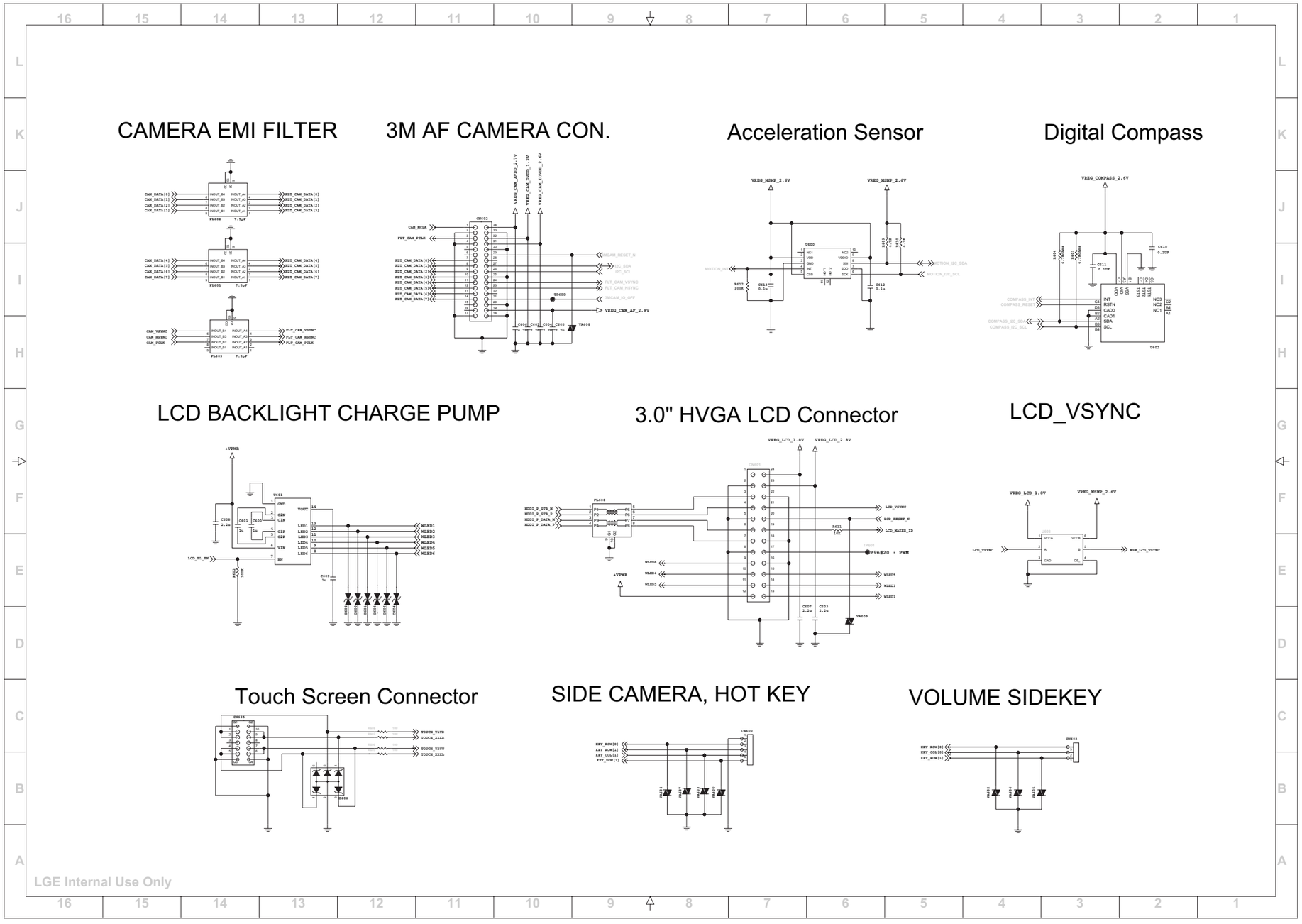

7. CIRCUIT DIAGRAM

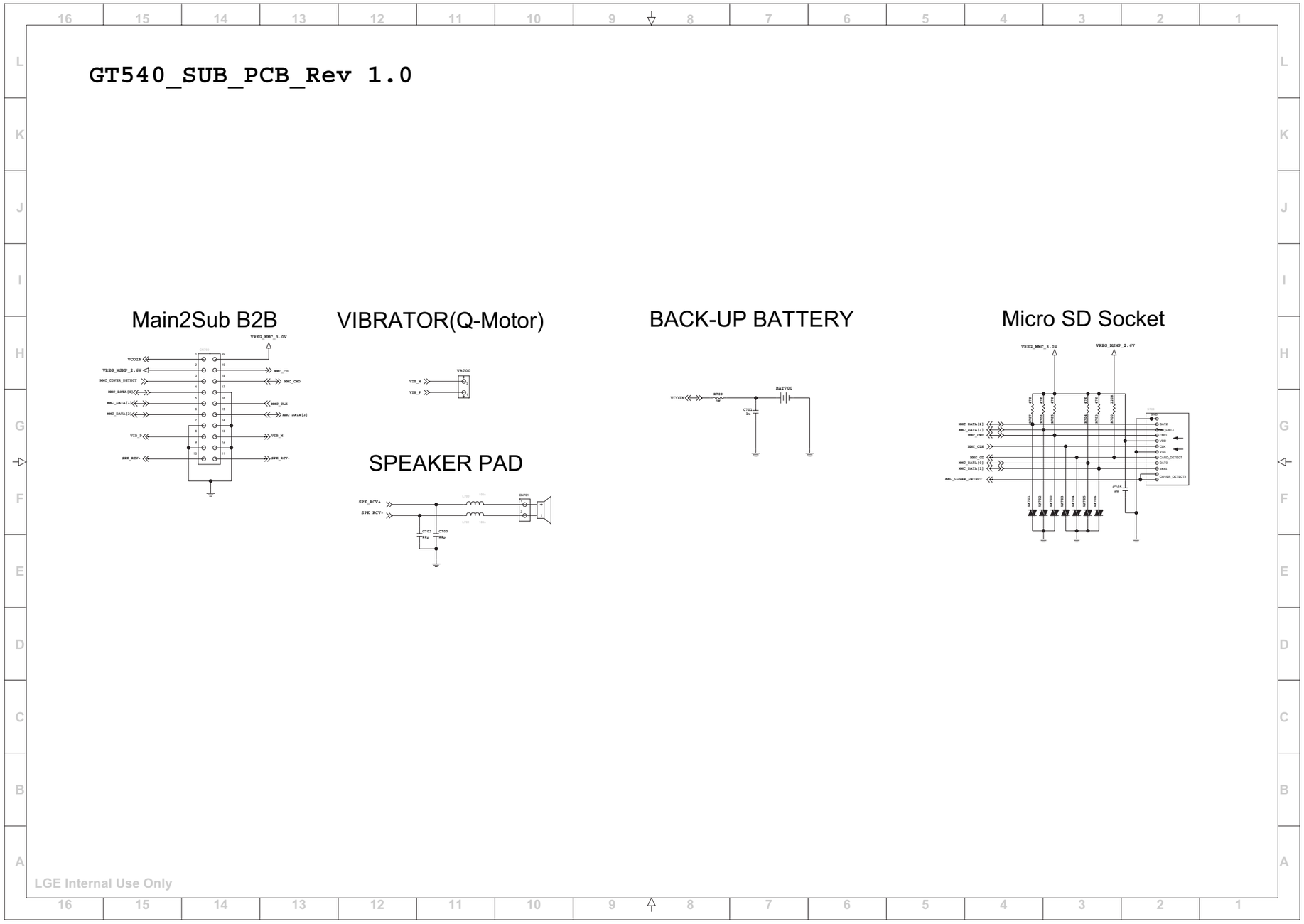

7. CIRCUIT DIAGRAM

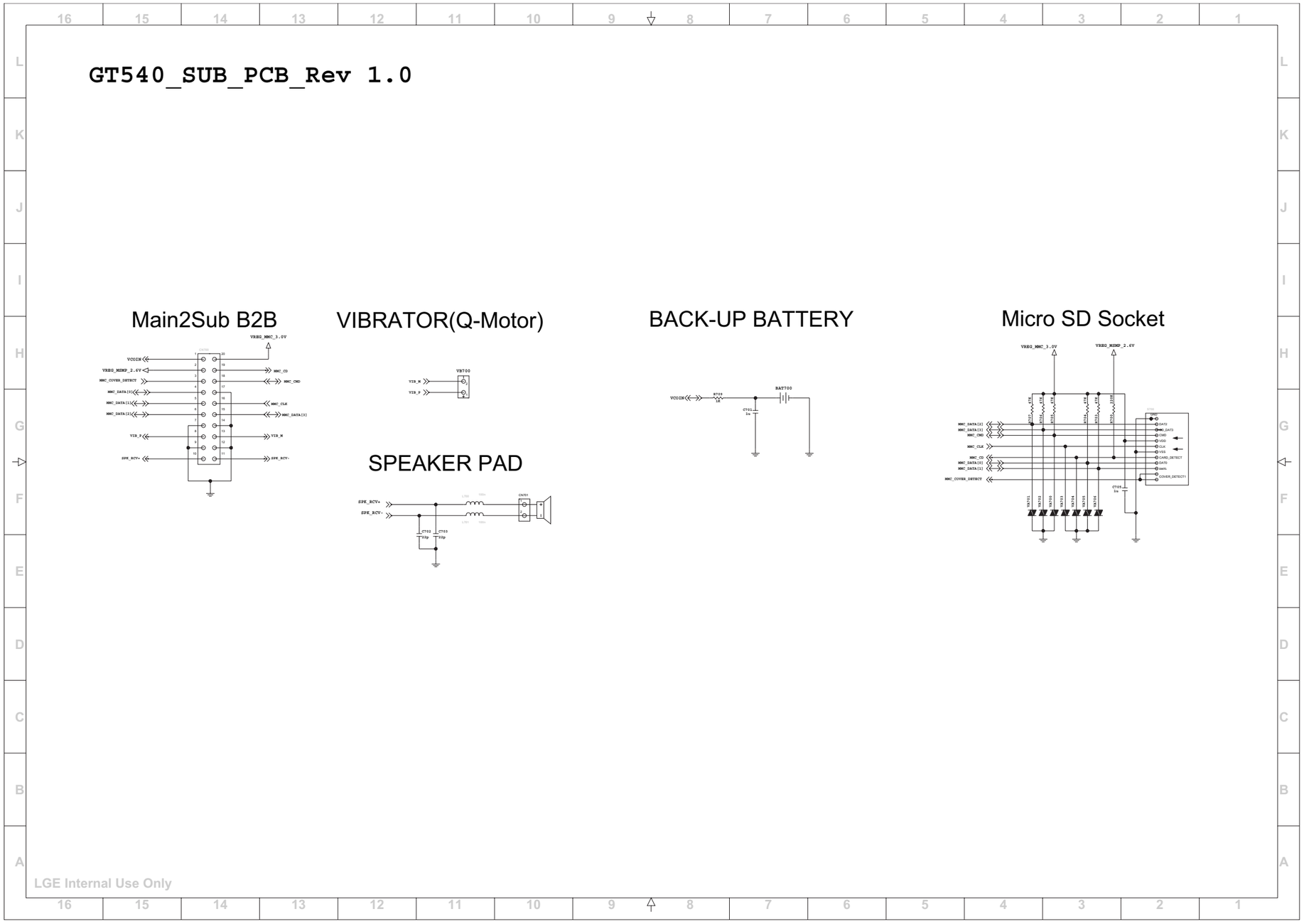

7. CIRCUIT DIAGRAM

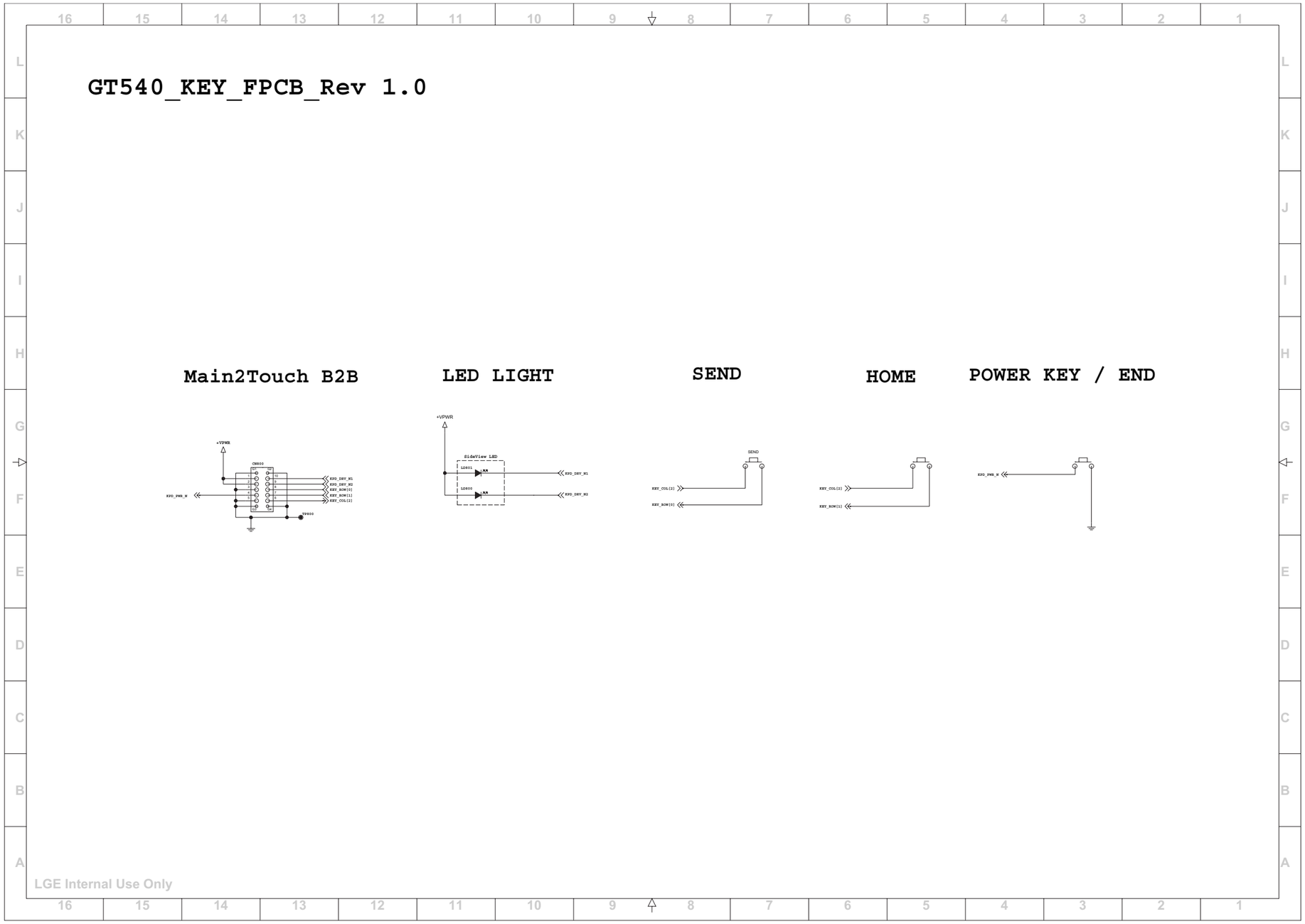

7. CIRCUIT DIAGRAM

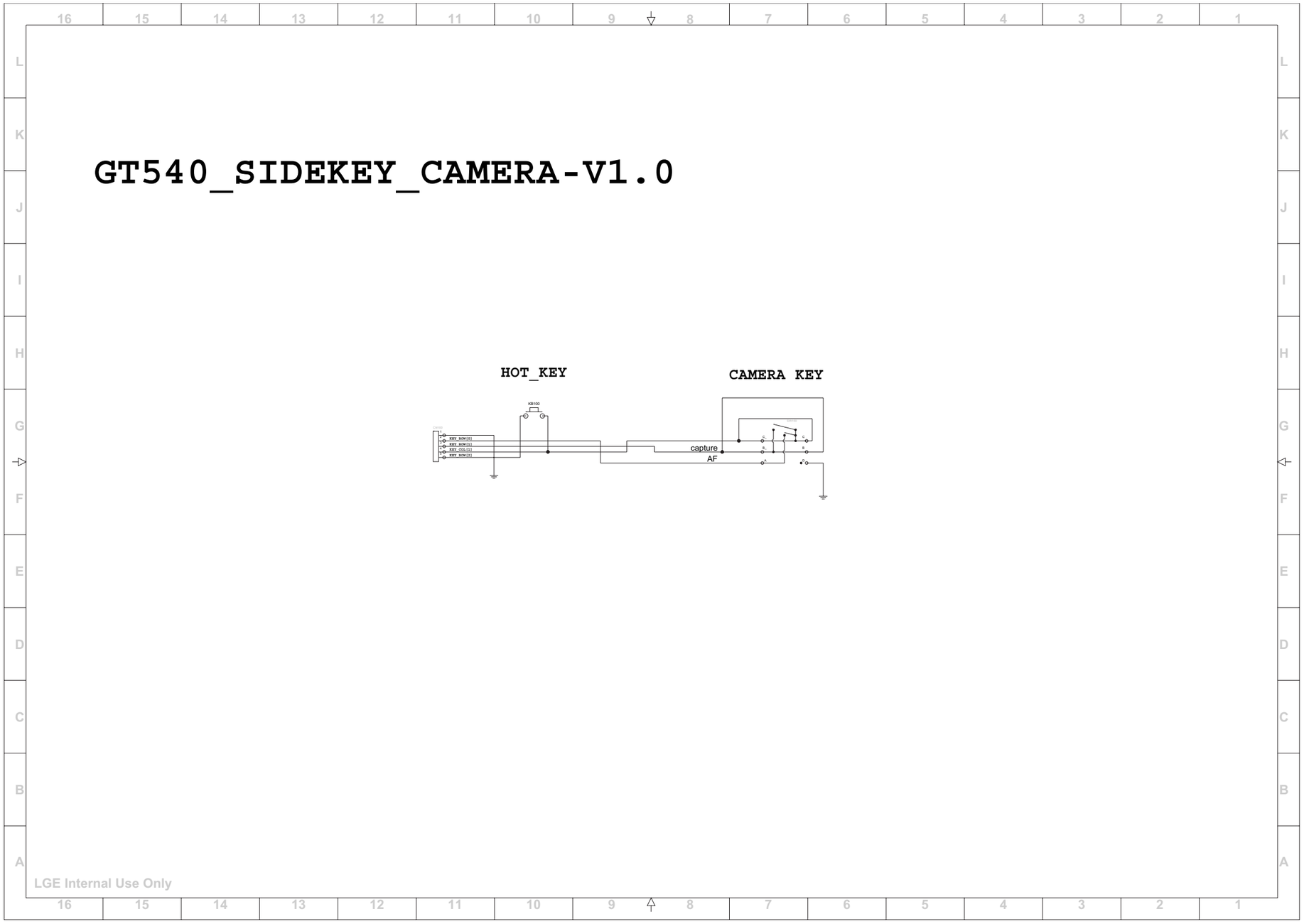

7. CIRCUIT DIAGRAM

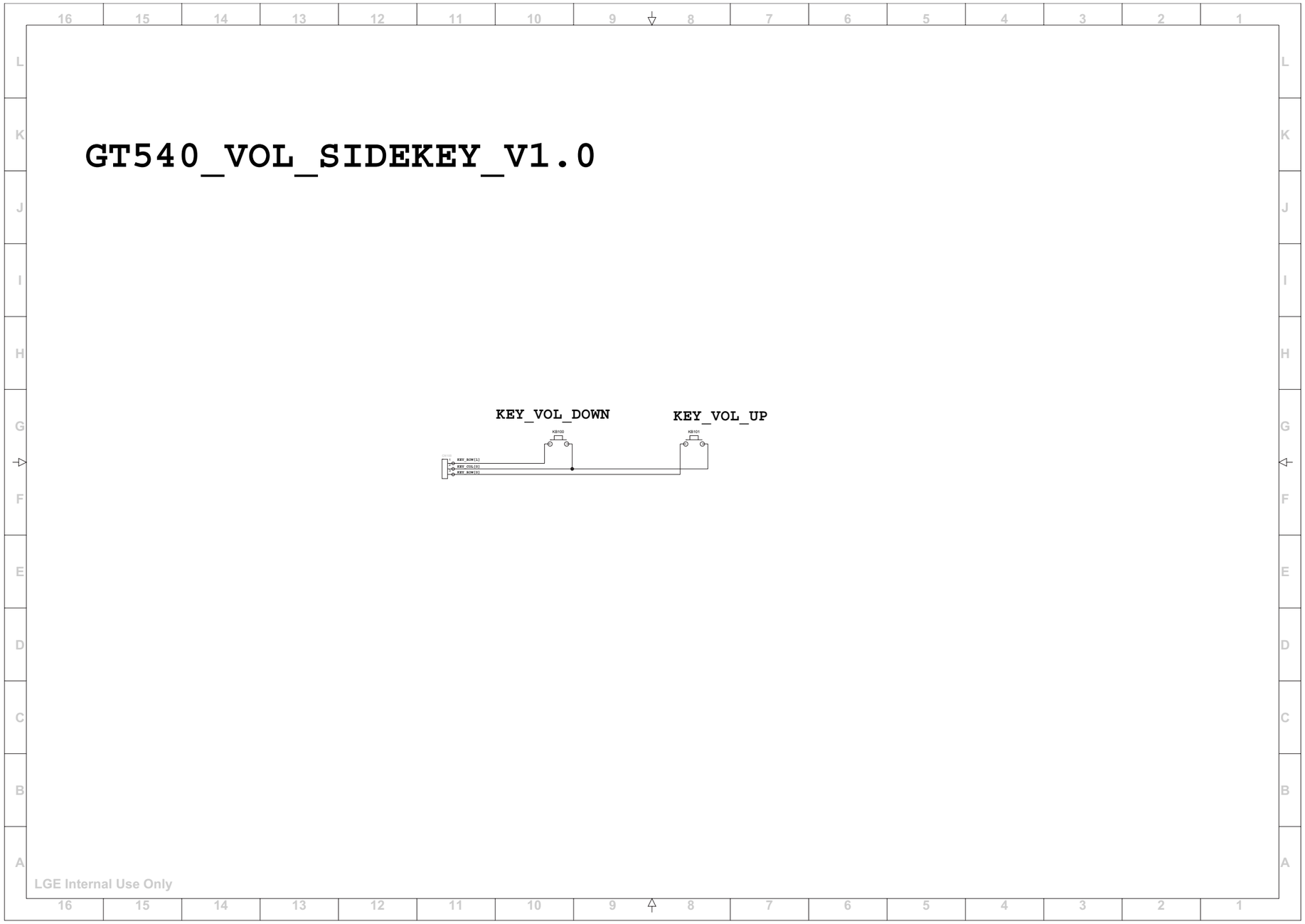

8. BGA Pin Map

MCP

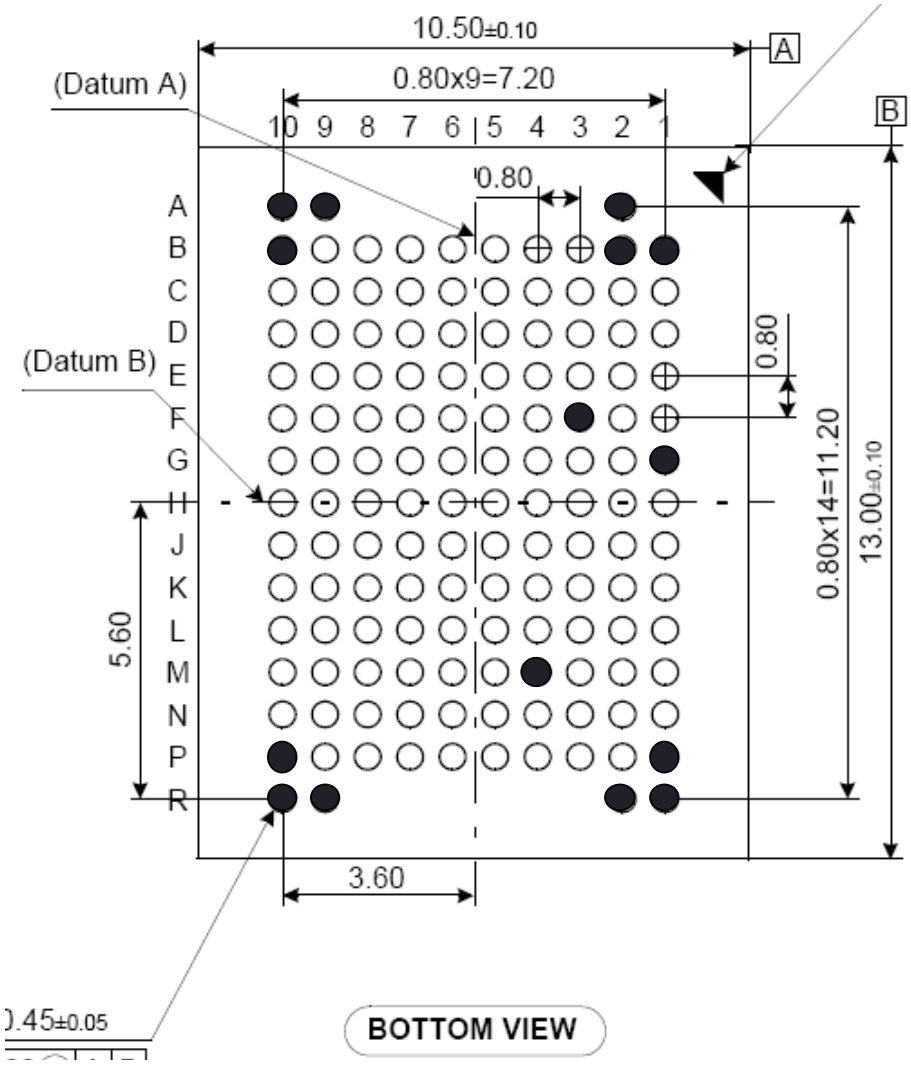

MSM7227

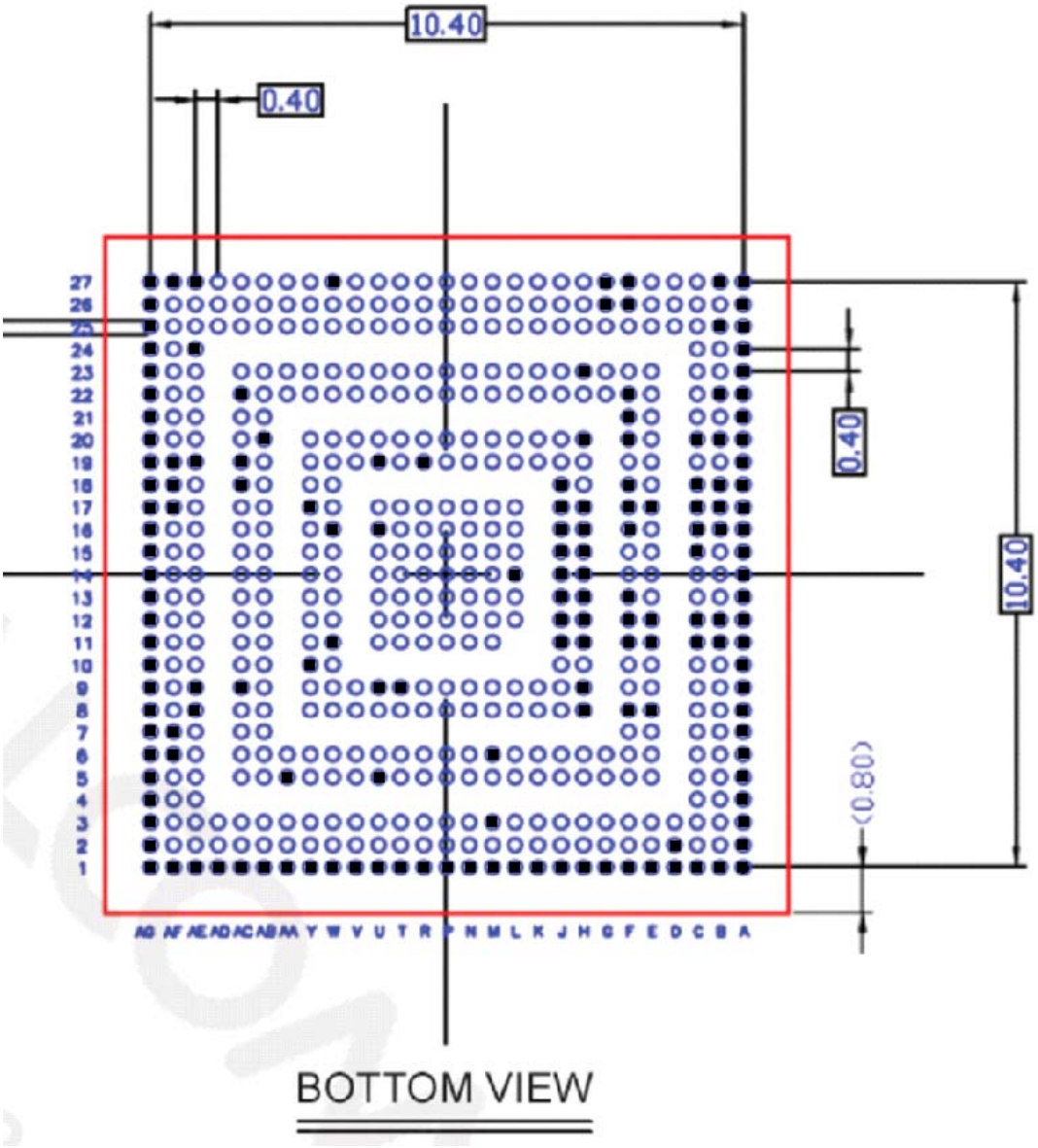

○ USE

● NOT IN USE

RTR6285(Top View)

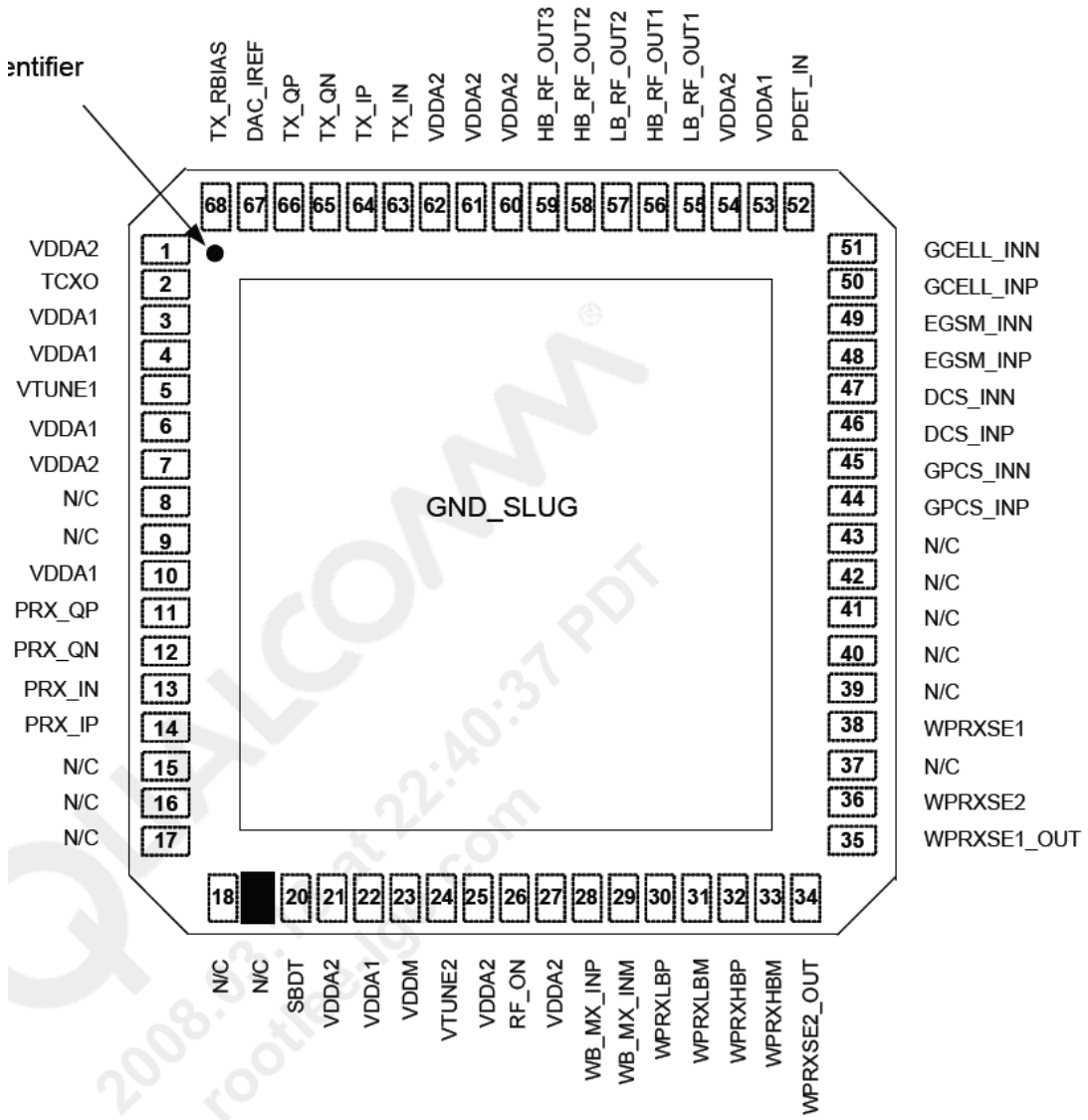

PM7540(PMIC)

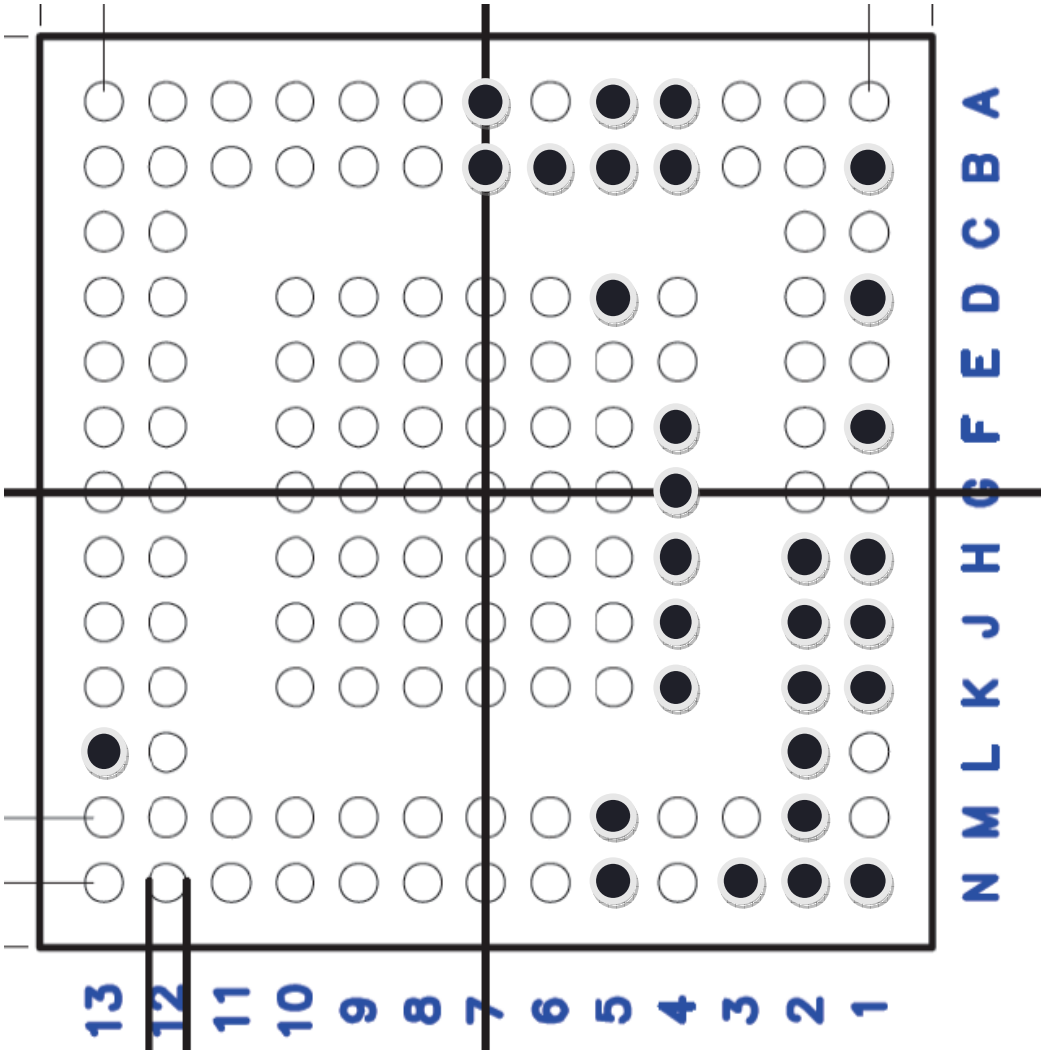

USE

NOT IN USE

9. PCB Layout

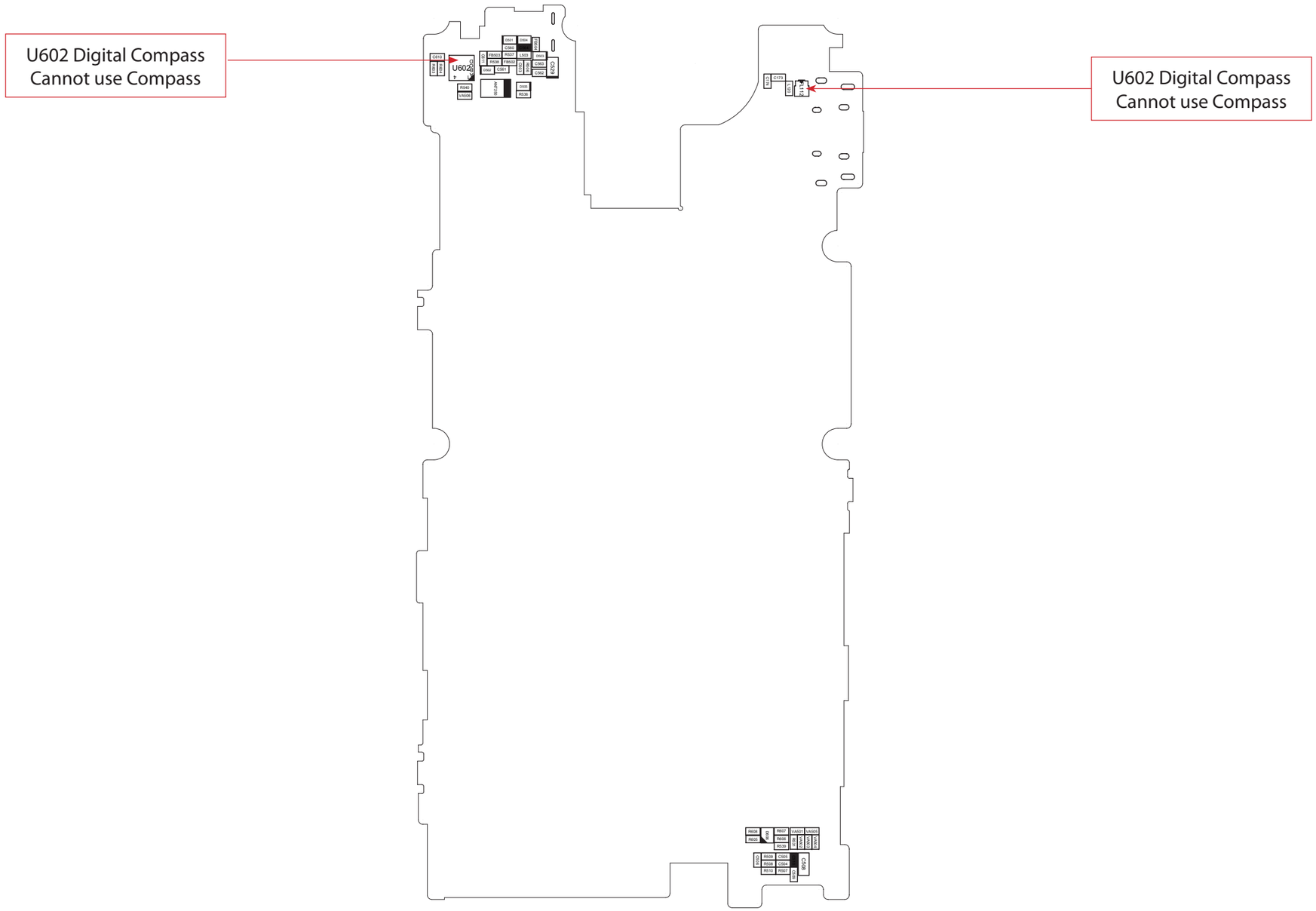

GT540_MAIN_SPFY0221301-1.0_TOP

9. PCB LAYOUT

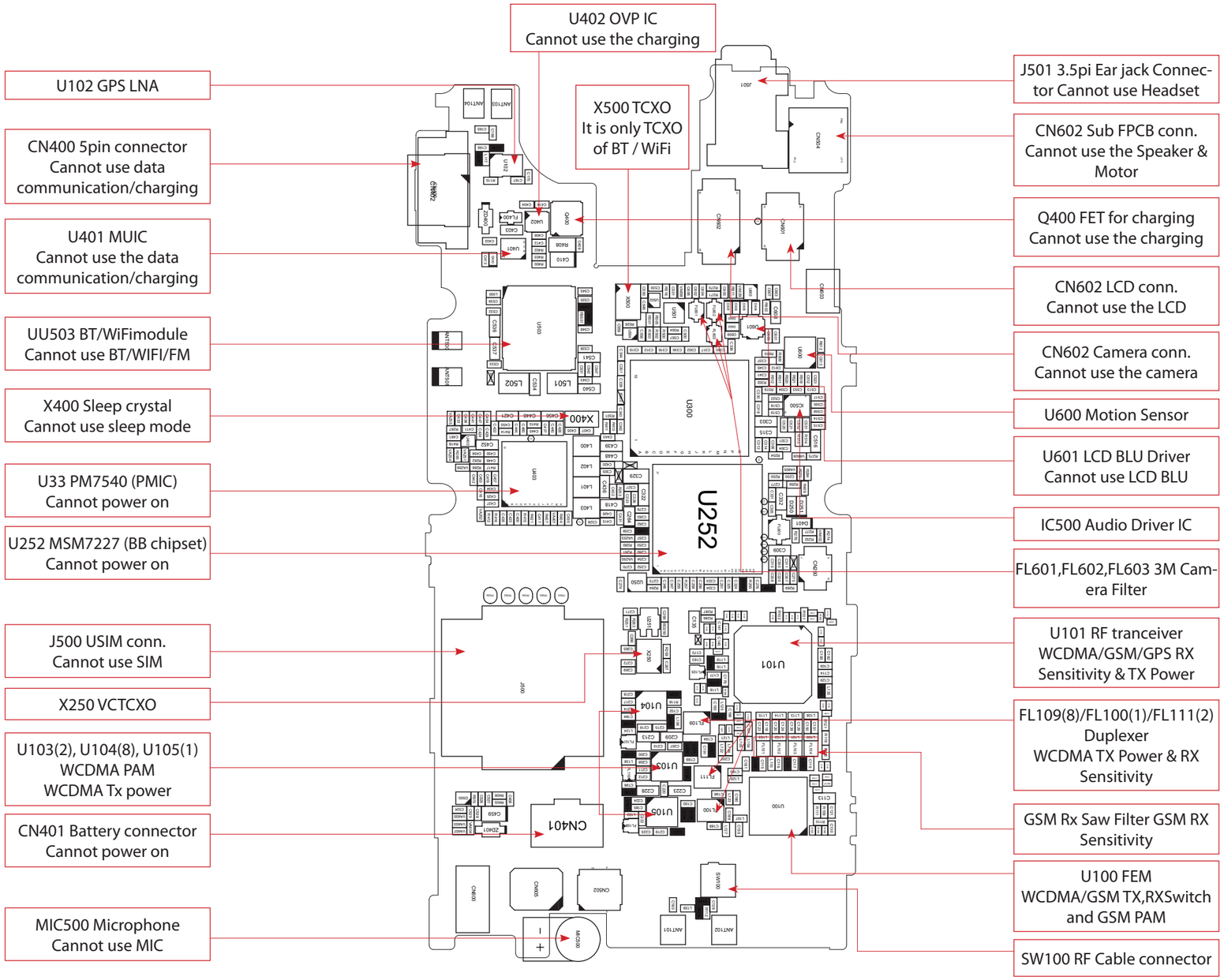

GT540_MAIN_SPFY0221301-1.0_BOT

9. PCB LAYOUT

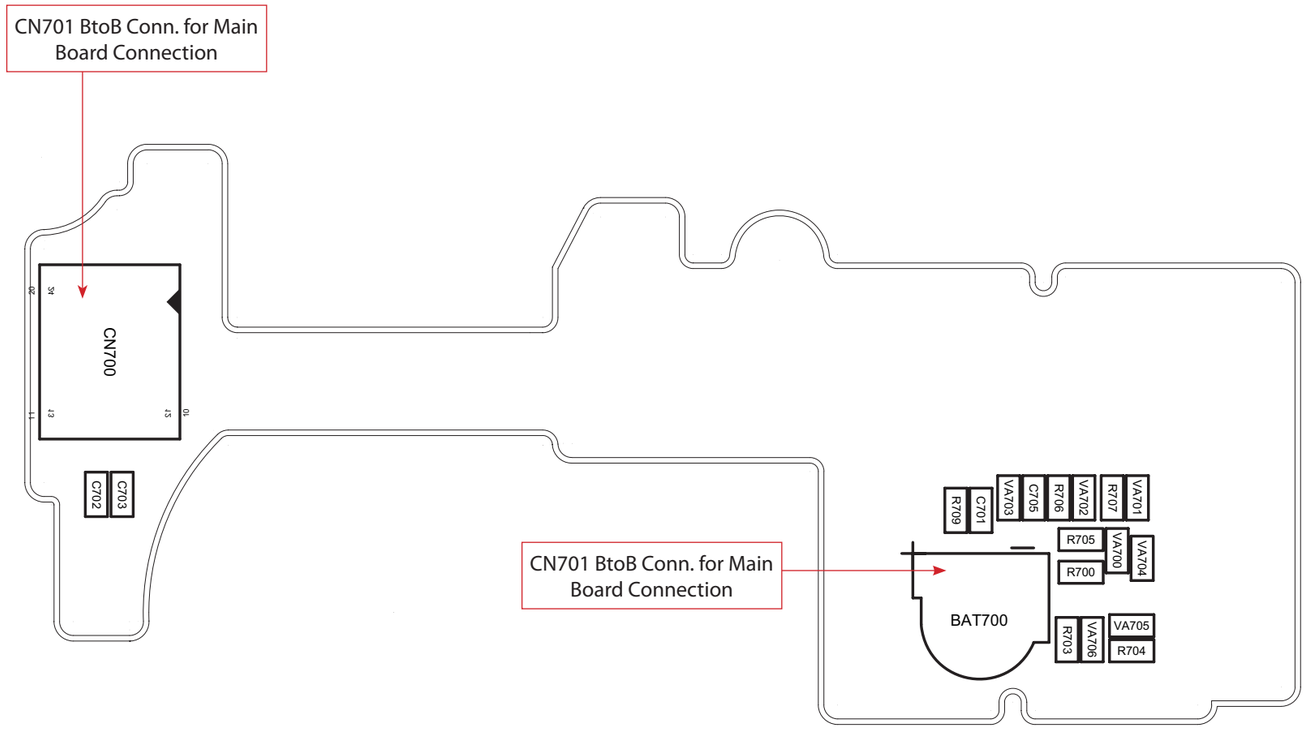

GT540_SUB_SPCY0224401-1.1_TOP

9. PCB LAYOUT

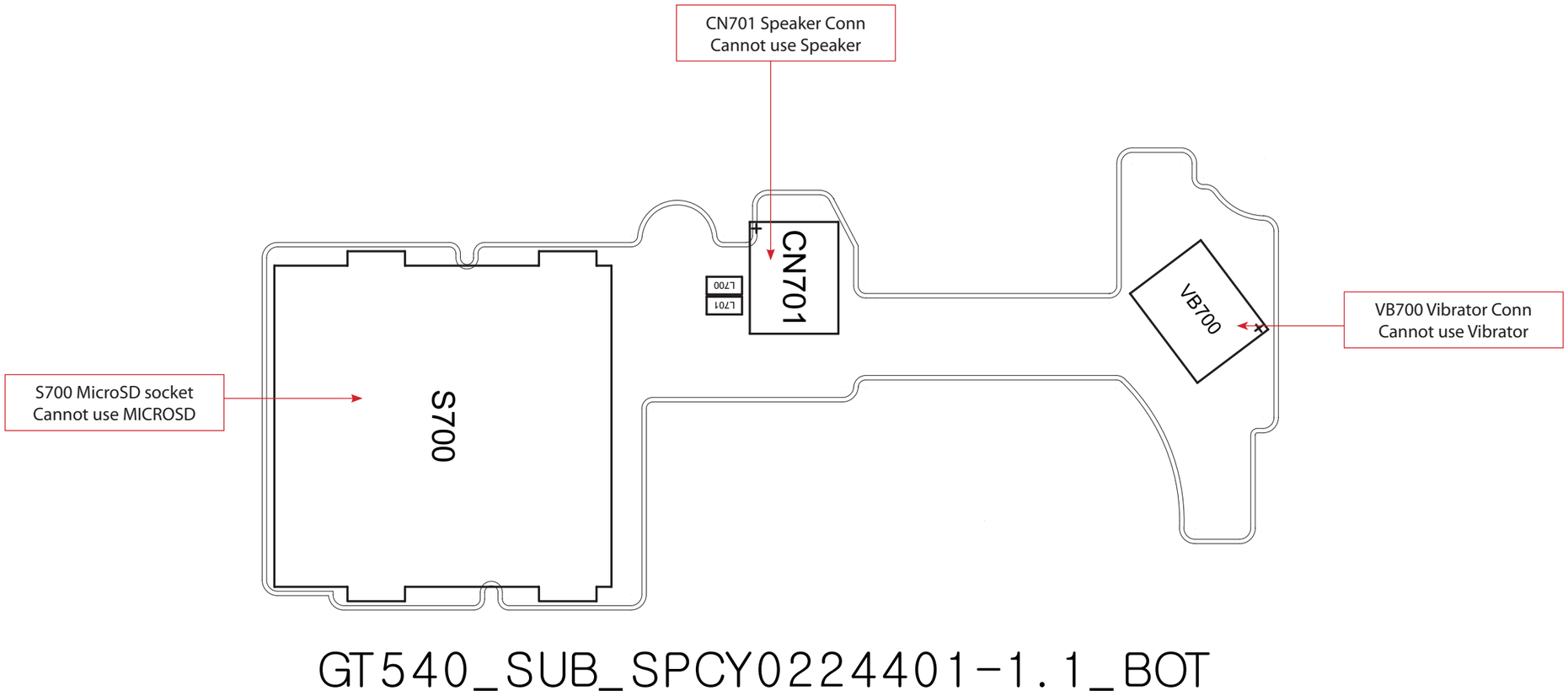

9. PCB LAYOUT

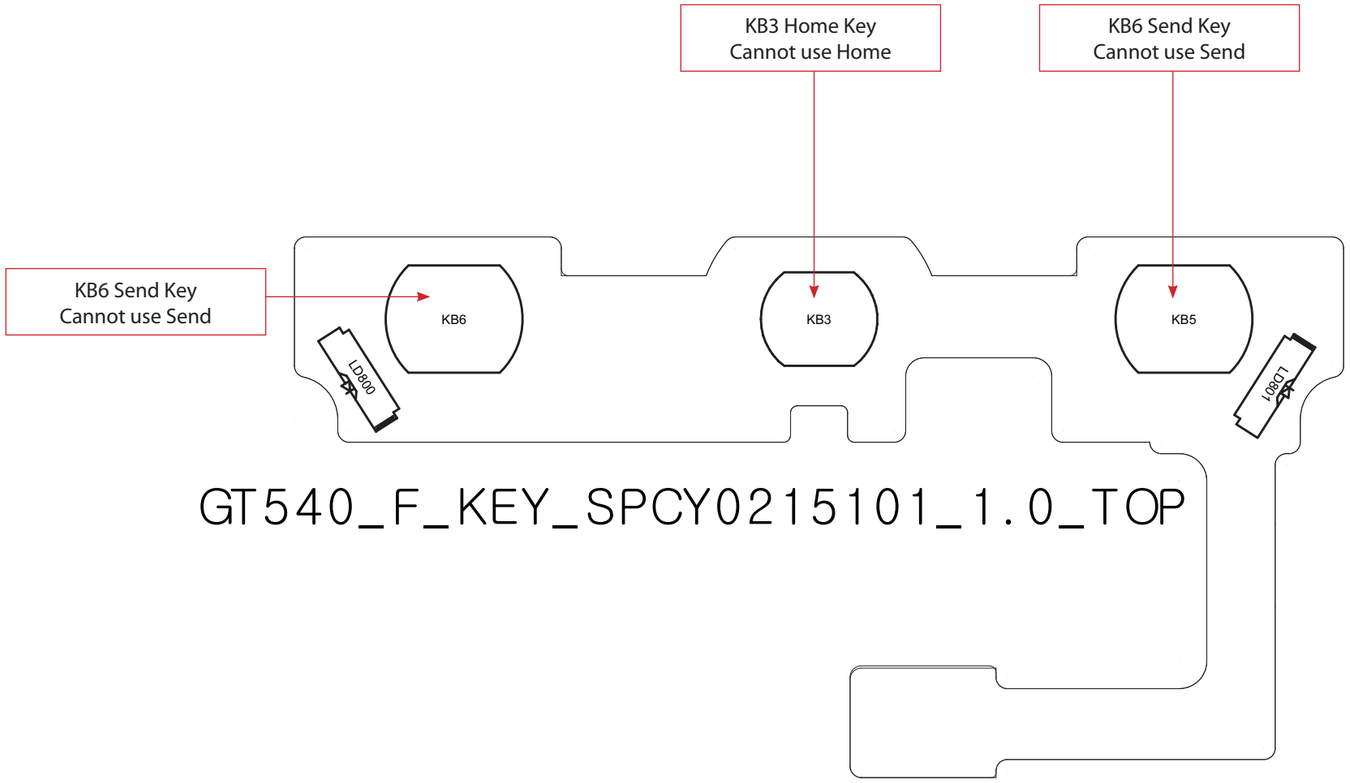

9. PCB LAYOUT

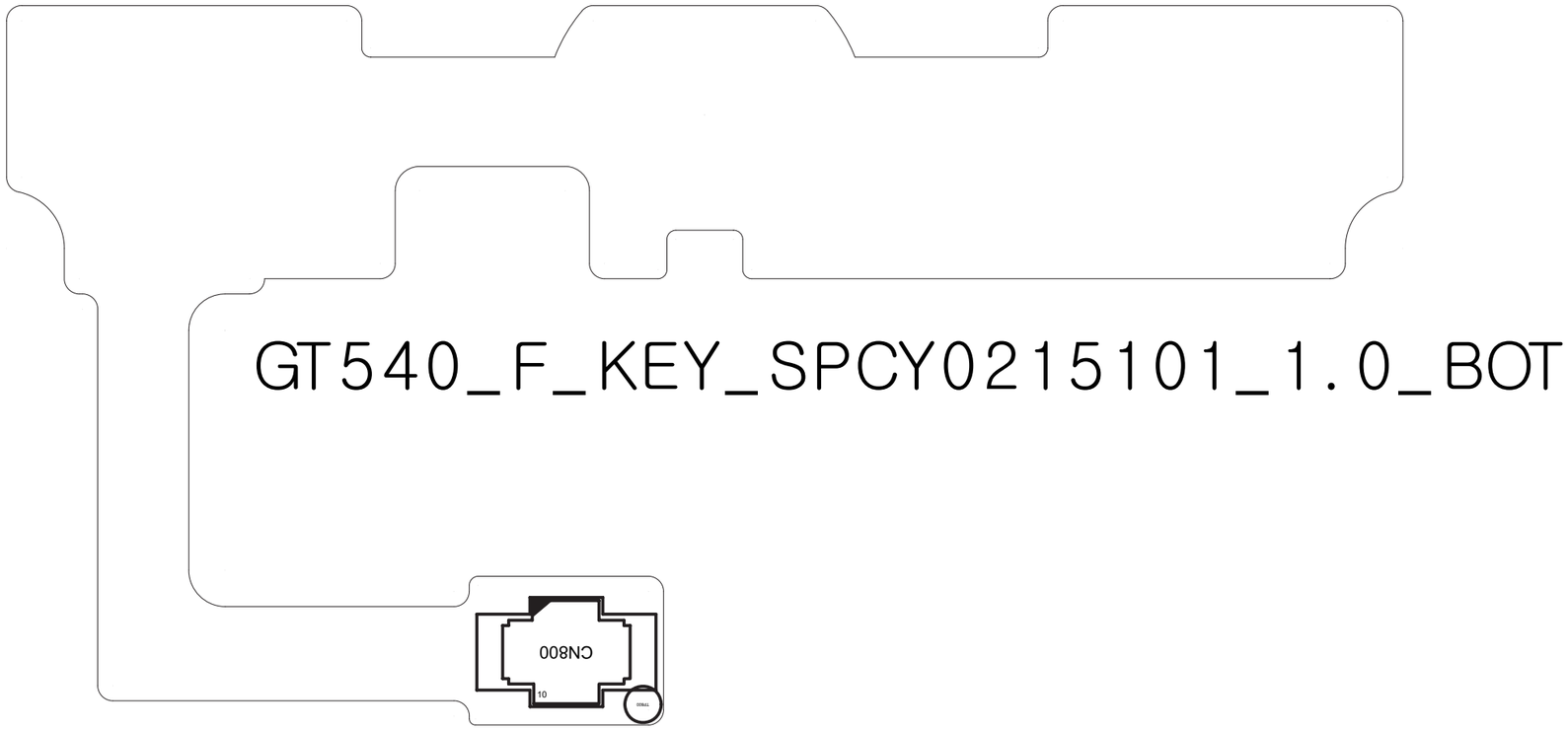

9. PCB LAYOUT

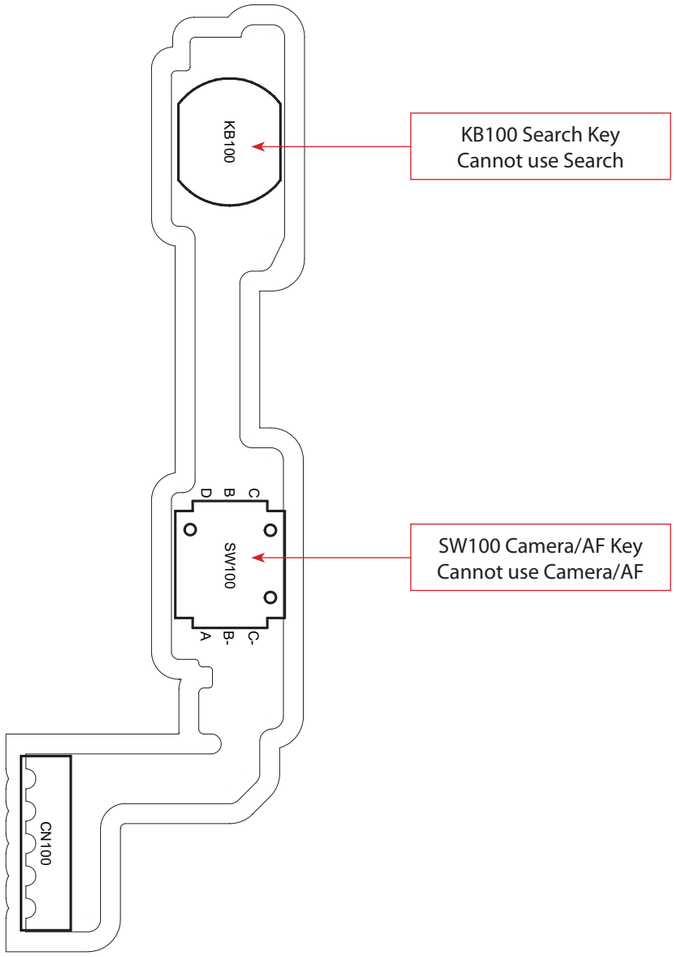

GT540_SK_CAM_SPKY0086801_1.1_TOP

9. PCB LAYOUT

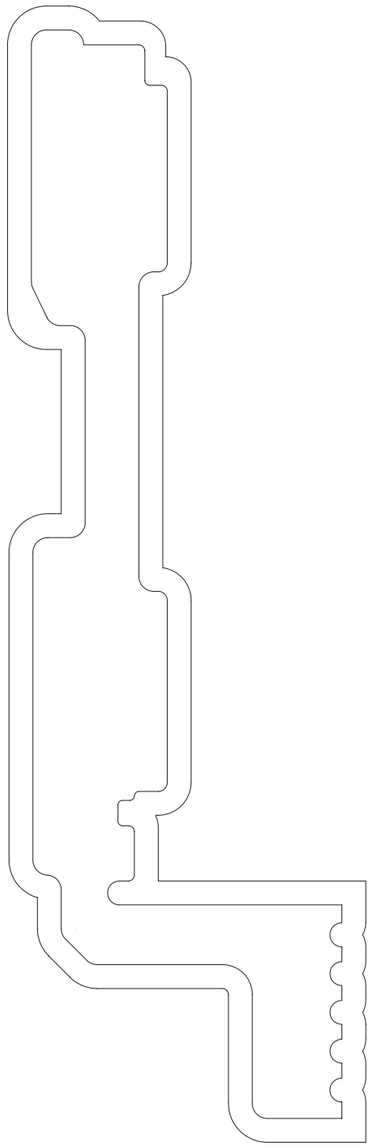

GT540_SK_CAM_SPKY0086801_1.1_BOT

9. PCB LAYOUT

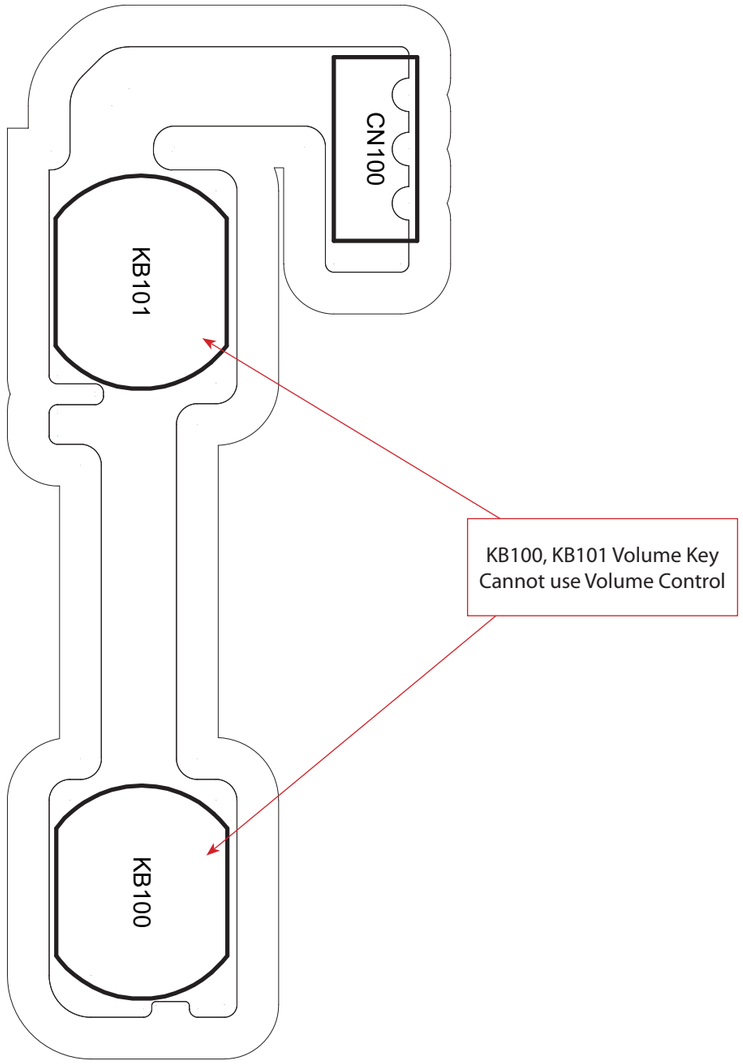

GT540_SK_VOL_SPKY0086901_1.0_TOP

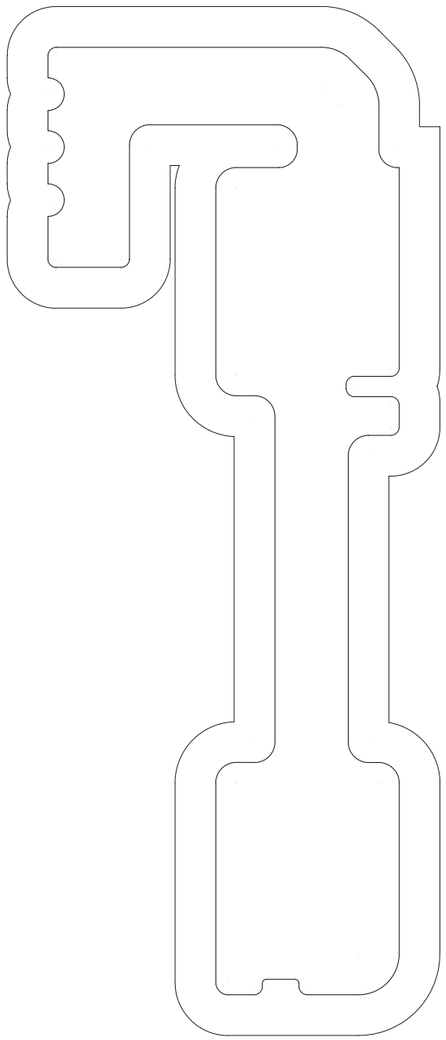

GT540_SK_VOL_SPKY0086901_1.0_BOT

10. Calibration & RF Auto Test Program (Tachyon)

1. Configuration of Tachyon

1-1. Configuration of directory

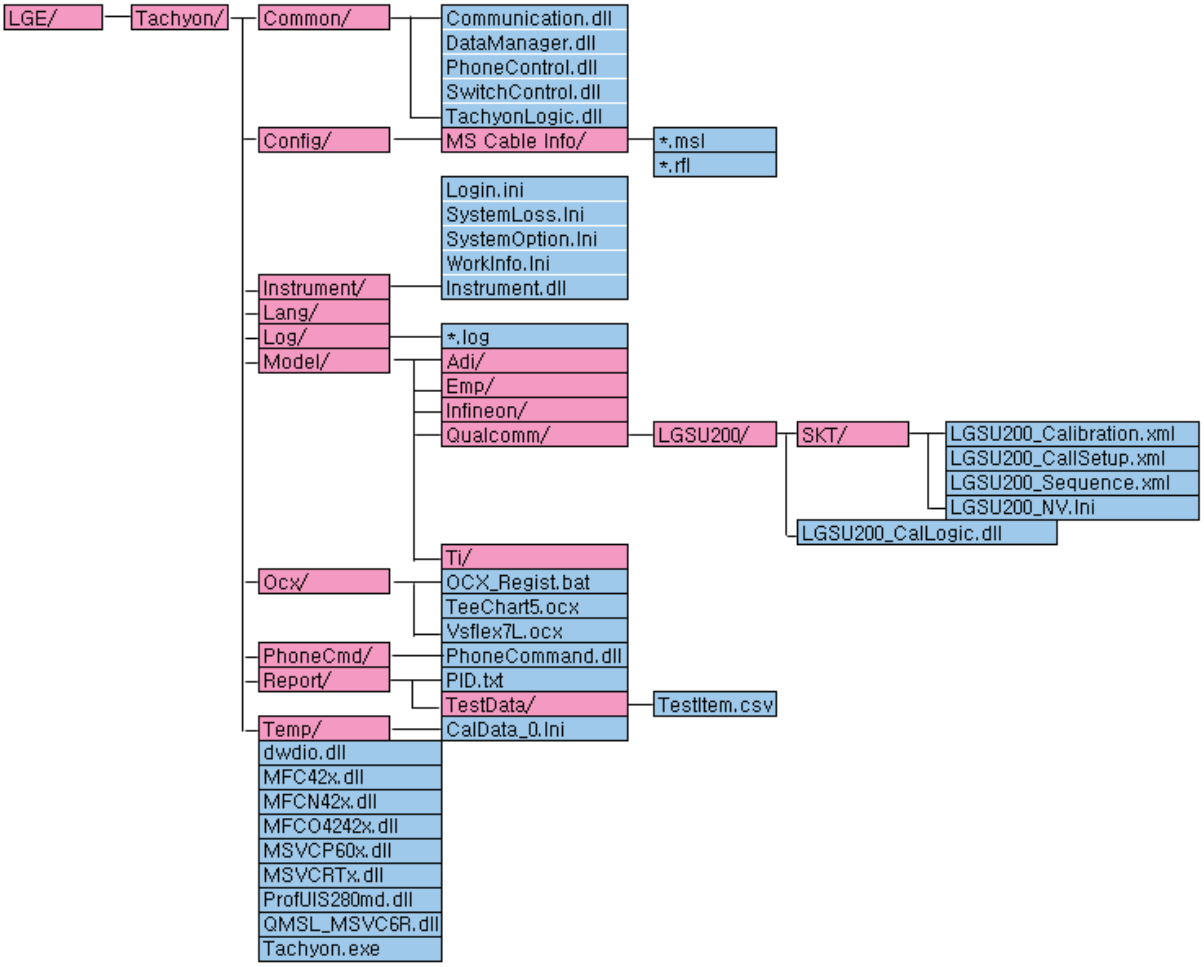

1-2. Description of basic folders

Folder	Description
Tachyon	Exe file and MFC dll, UI dll is present.
Common	Common dll files. (XML Data I/O , Auto Test Logic, Tachyon Logic Control, Communication)
Config	Envirement files. (Port configuration, Loss adjust)
Instrument	Tester control dll.
Model	Model files is present. (Model -> Solution (Qualcomm, EMP, ADI, INFINEON) -> MODEL NAME(LGGW620, LGSH470, ..) -> BUYER NAME(SKT, TEL, VIVO, …)
OCX	Conponent files.
PhoneCmd	Phone communication file
Report	Report Files is present. (Cal data, test data)

1-3. Description of configuration files

File	Description
'MODEL NAME'_Calibration.XML	There are imformations to calibrate. It consist of calibration items.
'MODEL NAME'_CallSetup.XML	There are imformations to call.
'MODEL NAME'_NV.INI	It consists of default values. It is written when 'cal&auto' is begun.
'MODEL NAME'_Sequence.XML	It is described a testing procedures.

2. How to use Tachyon

2-1. Model selection

Follow the procedure before start calibration & auto test

a. Click the icon,  in tool bar.
Then, you can see the below screen

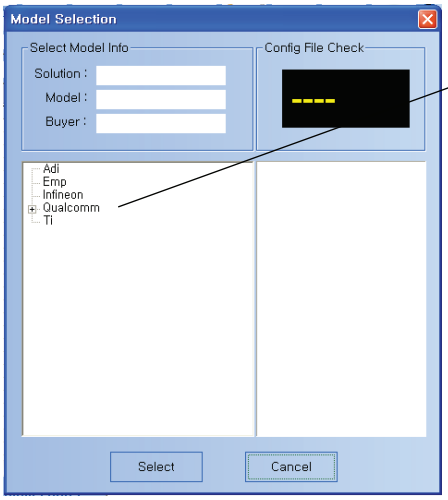

b. Select the chipset "Qualcomm"

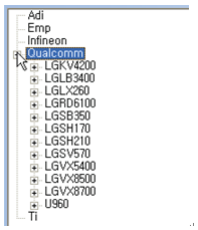

2-2. Start cal & auto

a. Click calibration & autotest button,  in Tool bar

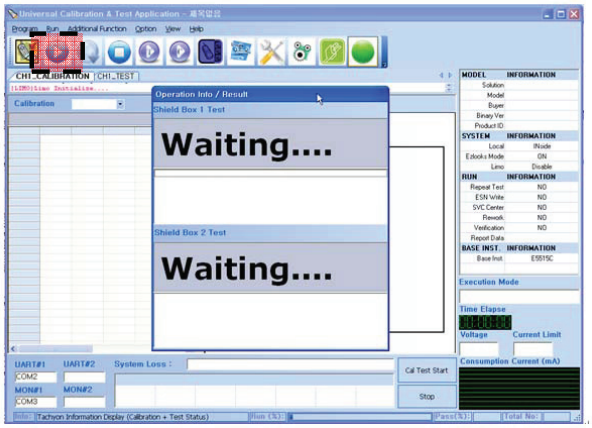

b. Calibration & autotest will be executed in order.

1) Precede Action.
   - NV write
   - Test command send.
2) Calibration
3) Auto test
4) After action
   - Phone reset
   - Change UE to AMSS

11. Stand-alone Test

Phone Test Mode_GT540

1. Enter the Engineer Menu
2. Tap 2. Device Test
3. Tap 1. Auto All Test

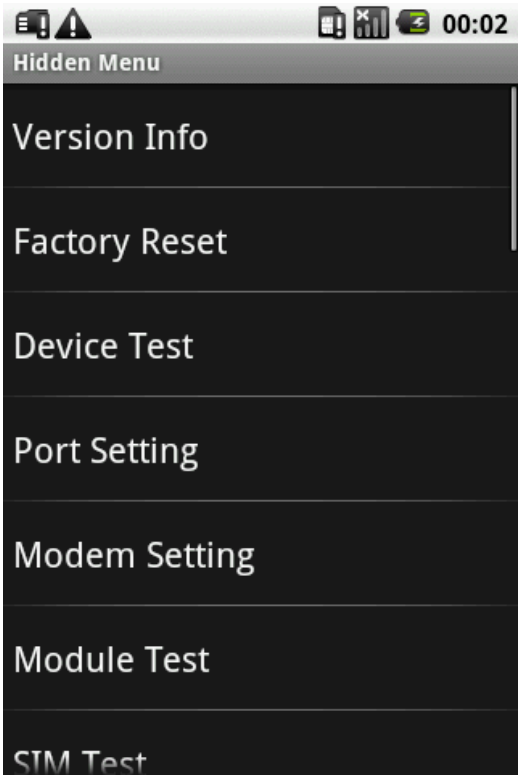

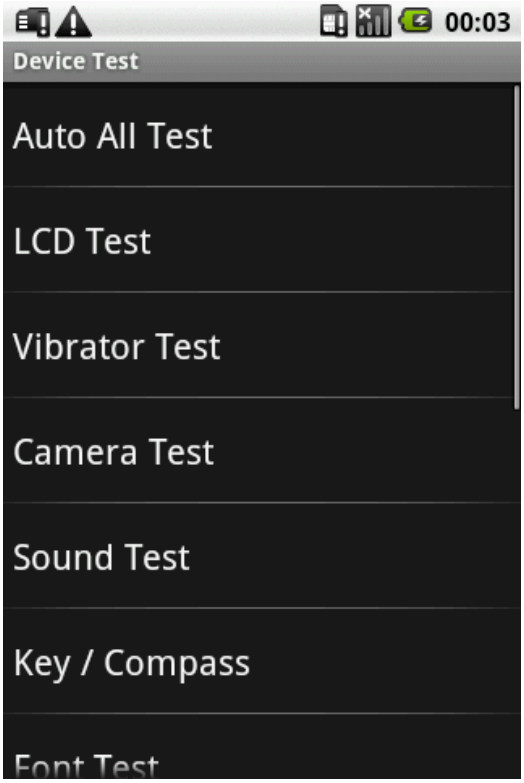

Item	Order	Description
(1) Touch Calibration	① Touch Calibration ② Automatically move to the next step if 5 points are tabbed	Touch the target to calibrate touch accuracy with a stylus pen 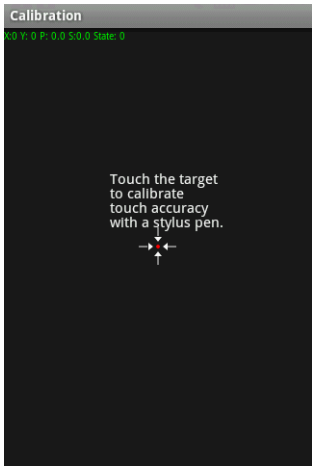

Item	Order	Description
(1) Key / Compass Test	① Key / Compass Test & SD, SIM Card Connection TEST ② IF OK, press “MENU” key ③ IF EXIT, tab “EXIT” Button	1. Press all keys for test - END CALL key - VOLUME UP key - VOLUME DOWN key - HOME key - BACK key - MUSIC key - AUTO FOCUS key - Camera key -MENU key 2. Check Pass of SD & SIM 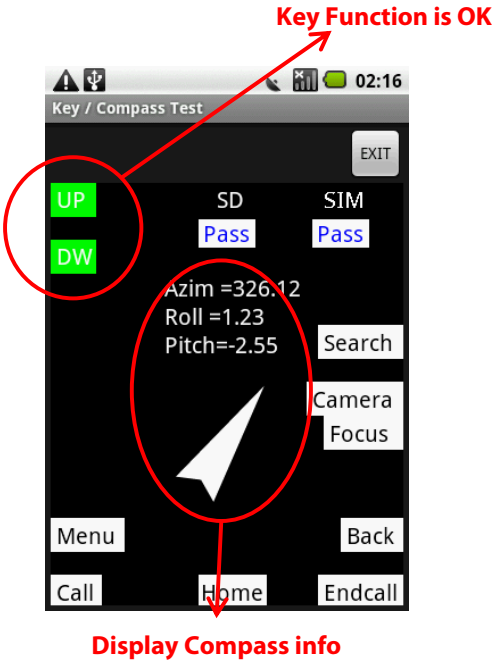

Item	Order	Description
(3) Sound	① Sound On ② IF OK, press “MENU” key	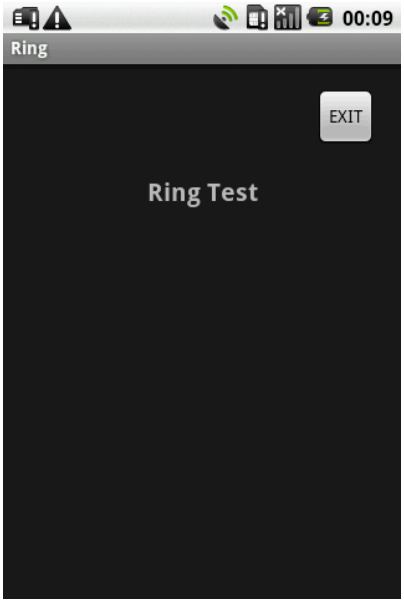 Ringtone (MP3) is played regularly → Press MENU key Move to next step

Item	Order	Description
(4) Vibrator Test	① Vibrator On ② IF OK, press “MENU” key	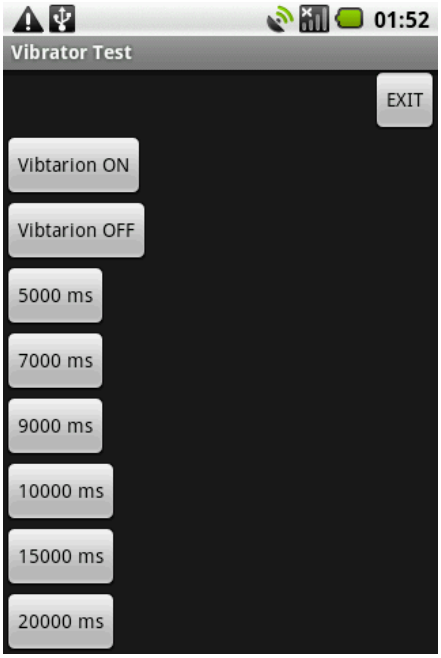 → Press MENU key Move to next step

Item	Order	Description
(5) GPS Test	① GPS On ② IF OK, press “MENU” key	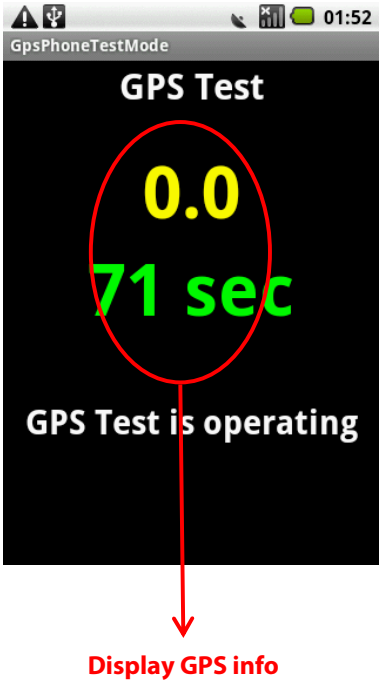 → Press MENU key Move to next step

Item	Order	Description
(6) Touch Test	① Touch Test Start ② IF OK, press “MENU” key	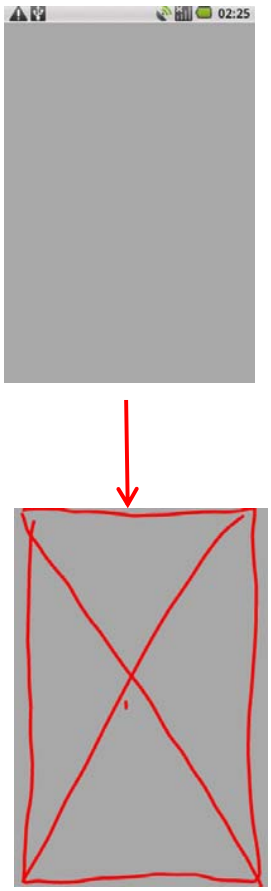 → Press MENU key Move to next step

Item	Order	Description
(7) Camera Test	① Camera Auto On ② Photo Shot Press "Camera icon" or Shutter key ③ Photo save ④ Automatically Video Recoding on ⑤ Press recording Icon Then start recording ⑥ After 3 seconds, Automatically stop Recording. ⑦ Video save	 

Item	Order	Description
(7) Camera Test	⑧ Automatically call image view ⑨ IF OK, press “MENU” key ⑩ Play Recording video ⑪ IF OK, press “MENU” key	 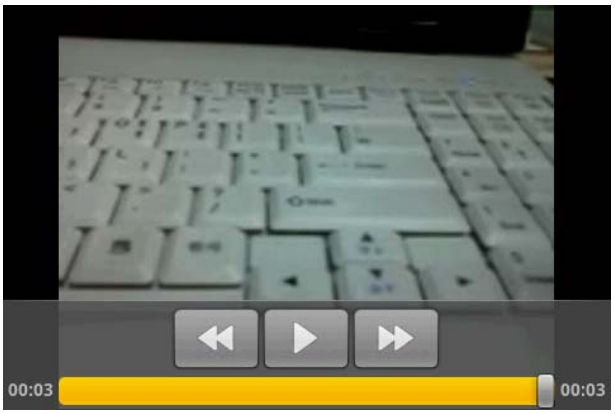

Item	Order	Description
(7) Camera Test	⑧ Automatically call image view ⑨ Press menu key, Call video play ⑩ IF OK, press “MENU” key	 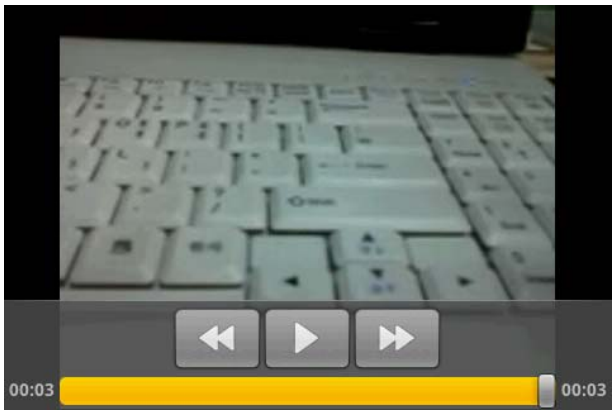

Item	Order	Description
(8) Loop Back (Include EAR-MIC)	① Loop Back Start ② IF OK, press “MENU” key	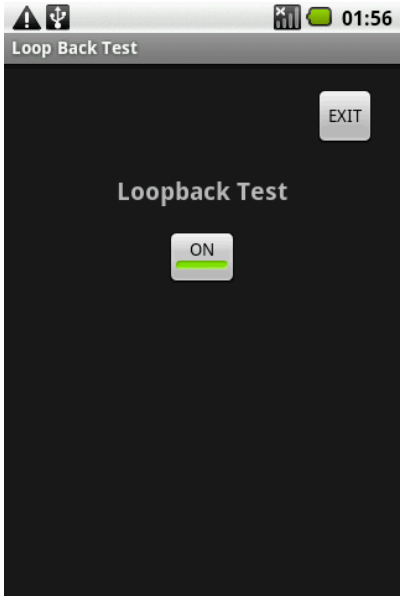

12. Exploded view & Replacement part list

12.1 Exploded view

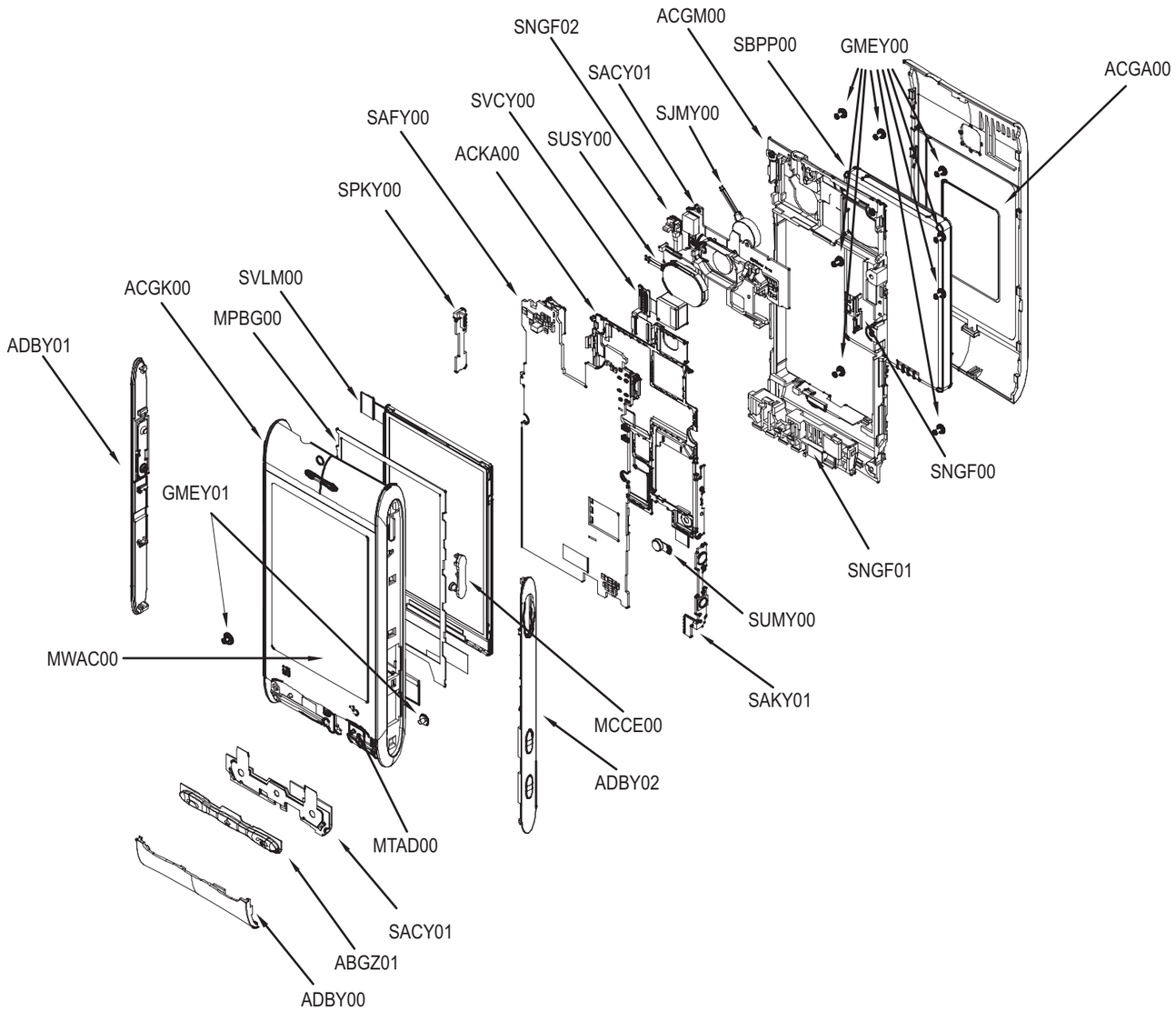

ACGA00	COVER ASSY,BATTERY
GMEY00	SCREW MACHINE
SBPP00	BATTERY PACK,LI-POLYMER
ACGM00	COVER ASSY,REAR
SJMY00	VIBRATOR,MOTOR
SACY01	PCB ASSY,FLEXIBLE
SNGF02	ANTENNA,GSM,FIXED
SUSY00	SPEAKER
SVCY00	CAMERA
ACKA00	CAN ASSY,SHIELD
SAFY00	PCB ASSY,MAIN
SPKY00	PCB,SIDEKEY
SVLM00	LCD MODULE
MPBG00	PAD,LCD
ACGK00	COVER ASSY,FRONT
ADBY00	DECO ASSY
GMEY01	SCREW MACHINE
MWAC00	WINDOW,LCD
ADBY01	DECO ASSY
ABGZ01	BUTTON ASSY
SACY01	PCB ASSY,FLEXIBLE
MTAD00	TAPE,WINDOW
ADBY02	DECO ASSY
MCCE00	CAP,RECEPTACLE
SAKY01	PCB ASSY,SIDEKEY
SUMY00	MICROPHONE
SNGF01	ANTENNA,GSM,FIXED
SNGF00	ANTENNA,GSM,FIXED
Location No	Part Description

12.2 Replacement Parts <Mechanic component>

Note: This Chapter is used for reference, Part order is ordered by SBOM standard on GCSC

Level	Location No.	Description	Part Number	Spec	Color	Remark
1		IMT,BAR/FLIP	TIMT0011031		WHITE PEARL	
2	AAAY00	ADDITION	AAAY0435102		WITHOUT COLOR	
2	APEY	PHONE	APEY0890707		White Pearl	
3	ACGG00	COVER ASSY,FOLDER	ACGG0106601		WITHOUT COLOR	
4	ABGZ00	BUTTON ASSY	ABGZ0003801		WHITE	
4	ACGK	COVER ASSY,FRONT	ACGK0152201		WHITE	
5	ADBY00	DECO ASSY	ADBY0019601		WITHOUT COLOR	
6	MDAY00	DECO	MDAY0074101	MOLD, PC LUPOY SC-1004ML, , , , ,	WHITE	
7	MICE00	INSERT,NUT	MICE0016912	PRESS, STS, , , , ,	WITHOUT COLOR	
6	MFBZ00	FILTER	MFBZ0010601	COMPLEX, (empty), , , , ,	BLACK	
5	MCCE00	CAP,RECEPTACLE	MCCE0057401	COMPLEX, (empty), , , , ,	WHITE	
5	MCJK00	COVER,FRONT	MCJK0121401	MOLD, PC LUPOY SC-1004ML, , , , ,	WHITE	
6	MBFZ00	BRACKET	MBFZ0045201	PRESS, STS, , , , ,	WITHOUT COLOR	
6	MICC	INSERT,FRONT(UPPER)	MICC0010001	D2.2 L2.0 KURL 45	GOLD	
5	MPBN00	PAD,SPEAKER	MPBN0083901	COMPLEX, (empty), , , , ,	BLACK	
5	MPBZ00	PAD	MPBZ0265301	COMPLEX, (empty), , , , ,	BLACK	
5	MTAA00	TAPE,DECO	MTAA0213401	COMPLEX, (empty), , , , ,	WITHOUT COLOR	
5	MTAA01	TAPE,DECO	MTAA0213501	COMPLEX, (empty), , , , ,	WITHOUT COLOR	
5	MTAA02	TAPE,DECO	MTAA0213601	COMPLEX, (empty), , , , ,	WITHOUT COLOR	
5	MTAD00	TAPE,WINDOW	MTAD0120901	COMPLEX, (empty), , , , ,	WITHOUT COLOR	
5	MTAZ00	TAPE	MTAZ0279901	COMPLEX, (empty), , , , ,	WITHOUT COLOR	
5	MWAC00	WINDOW,LCD	MWAC0135701	MOLD, PMMA HI835M, , , , ,	WITHOUT COLOR	
4	ADBY00	DECO ASSY	ADBY0019701		WITHOUT COLOR	

Level	Location No.	Description	Part Number	Spec	Color	Remark
5	MDAY00	DECO	MDAY0074401	MOLD, PC LUPOY SC-1004ML, , , , ,	WHITE	
6	MICE00	INSERT,NUT	MICE0016902	PRESS, STS, , , , ,	WITHOUT COLOR	
5	MFBZ00	FILTER	MFBZ0019501	COMPLEX, (empty), , , , ,	WITHOUT COLOR	
4	ADBY00	DECO ASSY	ADBY0019801		WITHOUT COLOR	
5	MBJZ00	BUTTON	MBJZ0020901	COMPLEX, (empty), , , , ,	WHITE	
5	MDAY00	DECO	MDAY0055501	MOLD, PC LUPOY SC-1004ML, , , , ,	WHITE	
5	MTAB00	TAPE,PROTECTION	MTAB0370101	COMPLEX, (empty), , , , ,	WITHOUT COLOR	
4	ADBY00	DECO ASSY	ADBY0019901		WITHOUT COLOR	
5	MBJZ00	BUTTON	MBJZ0021101	COMPLEX, (empty), , , , ,	WHITE	
5	MBJZ00	BUTTON	MBJZ0021201	COMPLEX, (empty), , , , ,	WHITE	
5	MDAY00	DECO	MDAY0055601	MOLD, PC LUPOY SC-1004ML, , , , ,	WHITE	
5	MTAB00	TAPE,PROTECTION	MTAB0370101	COMPLEX, (empty), , , , ,	WITHOUT COLOR	
4	ADCA00	DOME ASSY,METAL	ADCA0109201		WITHOUT COLOR	
4	MBFZ00	BRACKET	MBFZ0043401	PRESS, STS, , , , ,	WITHOUT COLOR	
4	MHGZ00	HOLDER	MHGZ0033401	MOLD, Urethane Rubber S185A, , , , ,	WITHOUT COLOR	
4	MPBG00	PAD,LCD	MPBG0104601	COMPLEX, (empty), , , , ,	BLACK	
4	MPBZ00	PAD	MPBZ0298001	COMPLEX, (empty), , , , ,	WITHOUT COLOR	
4	MTAA00	TAPE,DECO	MTAA0213701	COMPLEX, (empty), , , , ,	WITHOUT COLOR	
4	MTAB00	TAPE,PROTECTION	MTAB0370201	COMPLEX, (empty), , , , ,	WITHOUT COLOR	
3	ACGM00	COVER ASSY,REAR	ACGM0150701		WHITE	
4	MCCF00	CAP,MOBILE SWITCH	MCCF0069801	COMPLEX, (empty), , , , ,	WHITE	
4	MCJN00	COVER,REAR	MCJN0115601	MOLD, PC LUPOY SC-1004ML, , , , ,	WHITE	
4	MDAY00	DECO	MDAY0055701	MOLD, ABS LEXAN 500R, , , , ,	SILVER	
4	MPBJ00	PAD,MOTOR	MPBJ0072401	COMPLEX, (empty), , , , ,	BLACK	
4	MPBT00	PAD,CAMERA	MPBT0089101	COMPLEX, (empty), , , , ,	BLACK	
4	MPBZ00	PAD	MPBZ0298101	COMPLEX, (empty), , , , ,	WITHOUT COLOR	

Level	Location No.	Description	Part Number	Spec	Color	Remark
4	MPBZ00	PAD	MPBZ0298201	COMPLEX, (empty), , , , ,	WITHOUT COLOR	
4	MTAA00	TAPE,DECO	MTAA0213801	COMPLEX, (empty), , , , ,	WITHOUT COLOR	
4	MTAD00	TAPE,WINDOW	MTAD0121001	COMPLEX, (empty), , , , ,	WITHOUT COLOR	
4	MWAE00	WINDOW,CAMERA	MWAE0056801	COMPLEX, (empty), , , , ,	WITHOUT COLOR	
3	AFBZ00	FRAME ASSY	AFBZ0017201		WITHOUT COLOR	
4	MFEZ00	FRAME	MFEZ0025401	MOLD, PC LUPOY SC-1004ML, , , , ,	WITHOUT COLOR	
4	MPBJ00	PAD,MOTOR	MPBJ0072401	COMPLEX, (empty), , , , ,	BLACK	
4	MPBZ00	PAD	MPBZ0265401	COMPLEX, (empty), , , , ,	BLACK	
4	MPBZ01	PAD	MPBZ0265601	COMPLEX, (empty), , , , ,	BLACK	
4	MTAZ00	TAPE	MTAZ0280001	COMPLEX, (empty), , , , ,	WITHOUT COLOR	
4	MTAZ01	TAPE	MTAZ0280101	COMPLEX, (empty), , , , ,	WITHOUT COLOR	
4	MTAZ02	TAPE	MTAZ0280201	COMPLEX, (empty), , , , ,	WITHOUT COLOR	
4	MTAZ03	TAPE	MTAZ0280301	COMPLEX, (empty), , , , ,	WITHOUT COLOR	
3	GMEY	SCREW MACHINE,BIND	GMEY0011201	1.4 mm,3 mm,MSWR3(BK) ,N ,+ ,NYLOK	WITHOUT COLOR	
3	MDAY00	DECO	MDAY0055401	MOLD, PC LUPOY SC-1004ML, , , , ,	WHITE	
4	MICE00	INSERT,NUT	MICE0016902	PRESS, STS, , , , ,	WITHOUT COLOR	
3	MLAA00	LABEL,APPROVAL	MLAA0062304	COMPLEX, (empty), , , , ,	WITHOUT COLOR	
5	ACKA00	CAN ASSY,SHIELD	ACKA0024001		WITHOUT COLOR	
6	MCBA00	CAN,SHIELD	MCBA0083301	MOLD, STS, , , , ,	WITHOUT COLOR	
6	MIDZ00	INSULATOR	MIDZ0265801	COMPLEX, (empty), , , , ,	WITHOUT COLOR	
6	MLAB	LABEL,A/S	MLAB0001102	C2000 USASV DIA 4.0	WHITE	
6	MLAR	LABEL,WARNING	MLAR0005301	COMPLEX, (empty), , , , ,	YELLOW	
6	MTAK00	TAPE,CAMERA	MTAK0035201	COMPLEX, (empty), , , , ,	WITHOUT COLOR	
5	MGAZ00	GASKET	MGAZ0099901	COMPLEX, (empty), , , , ,	WITHOUT COLOR	

12. Exploded view & Replacement part list

Level	Location No.	Description	Part Number	Spec	Color	Remark
5	MPBZ00	PAD	MPBZ0315501	COMPLEX, (empty), , , , ,	WITHOUT COLOR	
5	MPBZ01	PAD	MPBZ0315601	COMPLEX, (empty), , , , ,	WITHOUT COLOR	
5	MLAZ00	LABEL	MLAZ0038301	PID Label 4 Array	WITHOUT COLOR	
6	ANT500	CONTACT	MCIZ0002701	PRESS, BeCu, , , , ,	WITHOUT COLOR	
6	ANT501	CONTACT	MCIZ0002701	PRESS, BeCu, , , , ,	WITHOUT COLOR	
6	CN402	BRACKET	MBFZ0048501	PRESS, STS, 0.3, , , ,	WITHOUT COLOR	
6	ANT250	CONTACT	MCIZ0001601	PRESS, BeCu, 0.1, , , ,	GOLD	

12.2 Replacement Parts <Main component>

Note: This Chapter is used for reference, Part order is ordered by SBOM standard on GCSC

Level	Location No.	Description	Part Number	Spec	Color	Remark
4	SNGF00	ANTENNA,GSM,FIXED	SNGF0059301	3.0 ,-2 dBd, ,BT(WiFi), FPCB ,; ,SINGLE ,-2.0 ,50 ,3.0		
4	SNGF01	ANTENNA,GSM,FIXED	SNGF0058301	3.0 ,-2.0 dBd, ,GSM850/GSM900/DCS/PCS/BAND1/BAND2/BAND8, INTERNAL ,; ,MULTI ,-2.0 ,50 ,3.0		
3	SACY00	PCB ASSY,FLEXIBLE	SACY0116201	GT540 SUB FPCB		
4	SACE00	PCB ASSY,FLEXIBLE,SMT	SACE0104501	GT540 SUB FPCB		
5	SACC00	PCB ASSY,FLEXIBLE,SMT BOTTOM	SACC0078401	GT540 SUB FPCB		
6	L700	INDUCTOR,CHIP	ELCH0001444	100 nH,J ,1005 ,R/TP ,chip coil		
6	L701	INDUCTOR,CHIP	ELCH0001444	100 nH,J ,1005 ,R/TP ,chip coil		
6	S700	CONN,SOCKET	ENSY0023801	9 ,ETC , ,0.95 mm,13.3x13.65x1.65t, Detect Pin		
5	SACD00	PCB ASSY,FLEXIBLE,SMT TOP	SACD0092001	GT540 SUB FPCB		
6	BAT700	MODULE,ETC	SMZY0023501	3.8 Backup Capacitor 0.03F ,; ,Module Assembly		
6	C701	CAP,CHIP,MAKER	ECZH0001215	1 uF,10V ,K ,X5R ,TC ,1005 ,R/TP		
6	C702	CAP,CERAMIC,CHIP	ECCH0000115	22 pF,50V,J,NP0,TC,1005,R/TP		
6	C703	CAP,CERAMIC,CHIP	ECCH0000115	22 pF,50V,J,NP0,TC,1005,R/TP		
6	C705	CAP,CERAMIC,CHIP	ECCH0004904	1 uF,6.3V ,K ,X5R ,TC ,1005 ,R/TP		
6	CN700	CONNECTOR,BOARD TO BOARD	ENBY0057901	20 ,0.4 mm,STRAIGHT ,gold , ,; ,20 ,0.40MM ,STRAIGHT ,MALE ,SMD ,[empty] ,3.0T ,		
6	R700	RES,CHIP,MAKER	ERHZ0000445	220 Kohm,1/16W ,J ,1005 ,R/TP		
6	R703	RES,CHIP,MAKER	ERHZ0000486	47 Kohm,1/16W ,J ,1005 ,R/TP		
6	R704	RES,CHIP,MAKER	ERHZ0000486	47 Kohm,1/16W ,J ,1005 ,R/TP		
6	R705	RES,CHIP,MAKER	ERHZ0000486	47 Kohm,1/16W ,J ,1005 ,R/TP		
6	R706	RES,CHIP,MAKER	ERHZ0000486	47 Kohm,1/16W ,J ,1005 ,R/TP		
6	R707	RES,CHIP,MAKER	ERHZ0000486	47 Kohm,1/16W ,J ,1005 ,R/TP		
6	R709	RES,CHIP	ERHY0000241	1K ohm,1/16W,J,1005,R/TP		
6	VA700	VARISTOR	SEVY0004301	18 V, ,SMD ,10pF, 1005		
6	VA701	VARISTOR	SEVY0004301	18 V, ,SMD ,10pF, 1005		
6	VA702	VARISTOR	SEVY0004301	18 V, ,SMD ,10pF, 1005		
6	VA703	VARISTOR	SEVY0004301	18 V, ,SMD ,10pF, 1005		

Level	Location No.	Description	Part Number	Spec	Color	Remark
6	VA704	VARISTOR	SEVY0004301	18 V, ,SMD ,10pF, 1005		
6	VA705	VARISTOR	SEVY0004301	18 V, ,SMD ,10pF, 1005		
6	VA706	VARISTOR	SEVY0004301	18 V, ,SMD ,10pF, 1005		
5	SPCY	PCB,FLEXIBLE	SPCY0224401	POLYI ,0.25 mm,MULTI-3 , ,; , , , , , , , , ,		
3	SACY01	PCB ASSY,FLEXIBLE	SACY0106401	GT540 KEY FPCB		
4	SACE00	PCB ASSY,FLEXIBLE,SMT	SACE0096501	GT540 KEY FPCB		
5	SACC00	PCB ASSY,FLEXIBLE,SMT BOTTOM	SACC0071401	GT540 KEY FPCB		
6	CN800	CONNECTOR,BOARD TO BOARD	ENBY0033101	10 PIN,0.4 mm,ETC , ,H=1.5, P4S Header		
5	SACD00	PCB ASSY,FLEXIBLE,SMT TOP	SACD0084001	GT540 KEY FPCB		
6	LD800	DIODE,LED,CHIP	EDLH0015801	White ,ETC ,R/TP ,3.8x1.1x0.4 ,; ,[empty] ,2.95~3.25 ,30mA ,1200~1600mcd , ,110mW ,[empty] ,[empty] ,2P		
6	LD801	DIODE,LED,CHIP	EDLH0015801	White ,ETC ,R/TP ,3.8x1.1x0.4 ,; ,[empty] ,2.95~3.25 ,30mA ,1200~1600mcd , ,110mW ,[empty] ,[empty] ,2P		
5	SPCY00	PCB,FLEXIBLE	SPCY0215101	POLYI ,0.3 mm,DOUBLE , ,; , , , , , , , , ,		
3	SAFY00	PCB ASSY,MAIN	SAFY0361901			
4	SAFB00	PCB ASSY,MAIN,INSERT	SAFB0111601			
5	BRAH00	RESIN,PC	BRAH0001301	; , , , ,[empty]	Black	
5	SAKY01	PCB ASSY,SIDEKEY	SAKY0009301	GT540 CAMERA FPCB		
6	SAKF00	PCB ASSY,SIDEKEY,SMT	SAKF0002901	GT540 CAMERA FPCB		
7	SAKD00	PCB ASSY,SIDEKEY,SMT TOP	SAKD0002501	GT540 CAMERA FPCB		
8	ESCY	SWITCH,TACT	ESCY0006101	15 V,20 mA,HORIZONTAL ,1 G, ,; ,1C1P ,[empty] ,[empty] ,[empty] , ,[empty]		
7	SPKY	PCB,SIDEKEY	SPKY0086801	POLYI ,0.15 mm,DOUBLE , ,; , , , , , , , , ,		
5	SPKY	PCB,SIDEKEY	SPKY0086901	POLYI ,0.15 mm,DOUBLE , ,; , , , , , , , , ,		
5	SUMY	MICROPHONE	SUMY0003815	FPCB ,-44 dB,4*1.0 ,TDMA Noise improvement ,; , , ,[empty] ,[empty] , ,FPC		
5	SVCY00	CAMERA	SVCY0024801	CMOS ,MEGA ,3M AF Sony(1/5"), 8.5x8.5x5.4t, FPCB 3.5mm, 90 degree		
4	SAFF00	PCB ASSY,MAIN,SMT	SAFF0268501			
5	SAFC00	PCB ASSY,MAIN,SMT BOTTOM	SAFC0141701			
6	BD250	FILTER,BEAD,CHIP	SFBH0009601	220 ohm,1005 ,DCR : 0.35 , Rated current : 500mA,PBFREE		
6	C100	INDUCTOR,CHIP	ELCH0004726	1.5 nH,J ,1005 ,R/TP ,		

Level	Location No.	Description	Part Number	Spec	Color	Remark
6	C101	CAP,CHIP,MAKER	ECZH0000813	100 pF,50V ,J ,NP0 ,TC ,1005 ,R/TP		
6	C102	INDUCTOR,CHIP	ELCH0004709	3.3 nH,S ,1005 ,R/TP ,		
6	C106	CAP,CERAMIC,CHIP	ECCH0009101	0.1 uF,6.3V ,K ,X5R ,TC ,0603 ,R/TP		
6	C107	CAP,CERAMIC,CHIP	ECCH0009103	100 pF,50V ,J ,X7R ,TC ,0603 ,R/TP , , ,[empty] ,[empty] ,C0G ,[empty] ,[empty] ,[empty] ,0.3 mm		
6	C108	CAP,CERAMIC,CHIP	ECCH0009104	33 pF,50V ,J ,X7R ,TC ,0603 ,R/TP		
6	C109	CAP,CHIP,MAKER	ECZH0000830	33 pF,50V ,J ,NP0 ,TC ,1005 ,R/TP		
6	C110	CAP,CERAMIC,CHIP	ECCH0009101	0.1 uF,6.3V ,K ,X5R ,TC ,0603 ,R/TP		
6	C111	CAP,CERAMIC,CHIP	ECCH0009101	0.1 uF,6.3V ,K ,X5R ,TC ,0603 ,R/TP		
6	C112	CAP,CERAMIC,CHIP	ECCH0009101	0.1 uF,6.3V ,K ,X5R ,TC ,0603 ,R/TP		
6	C113	CAP,CERAMIC,CHIP	ECCH0005604	10000000 pF,6.3V ,M ,X5R ,TC ,1608 ,R/TP , , ,[empty] ,[empty] ,[empty] ,[empty] ,[empty] ,[empty] ,0.8 mm		
6	C114	CAP,CHIP,MAKER	ECZH0000830	33 pF,50V ,J ,NP0 ,TC ,1005 ,R/TP		
6	C115	CAP,CHIP,MAKER	ECZH0000841	56 pF,50V ,J ,NP0 ,TC ,1005 ,R/TP		
6	C116	CAP,CHIP,MAKER	ECZH0000841	56 pF,50V ,J ,NP0 ,TC ,1005 ,R/TP		
6	C117	CAP,CHIP,MAKER	ECZH0000813	100 pF,50V ,J ,NP0 ,TC ,1005 ,R/TP		
6	C118	INDUCTOR,CHIP	ELCH0004720	1.2 nH,S ,1005 ,R/TP ,		
6	C119	CAP,CHIP,MAKER	ECZH0000813	100 pF,50V ,J ,NP0 ,TC ,1005 ,R/TP		
6	C120	INDUCTOR,CHIP	ELCH0001056	2.7 nH,S ,1005 ,R/TP ,PBFREE		
6	C121	CAP,CHIP,MAKER	ECZH0000813	100 pF,50V ,J ,NP0 ,TC ,1005 ,R/TP		
6	C122	CAP,CERAMIC,CHIP	ECCH0009101	0.1 uF,6.3V ,K ,X5R ,TC ,0603 ,R/TP		
6	C123	INDUCTOR,CHIP	ELCH0004720	1.2 nH,S ,1005 ,R/TP ,		
6	C124	INDUCTOR,CHIP	ELCH0001056	2.7 nH,S ,1005 ,R/TP ,PBFREE		
6	C125	CAP,CHIP,MAKER	ECZH0025920	1 nF,16V ,K ,X7R ,HD ,0603 ,R/TP , , ,[empty] ,[empty] ,[empty] ,[empty] ,[empty] ,[empty]		
6	C126	INDUCTOR,CHIP	ELCH0004705	8.2 nH,J ,1005 ,R/TP ,		
6	C127	CAP,CERAMIC,CHIP	ECCH0009206	68 pF,25V ,J ,X7R ,TC ,0603 ,R/TP		
6	C128	CAP,CHIP,MAKER	ECZH0000813	100 pF,50V ,J ,NP0 ,TC ,1005 ,R/TP		
6	C129	CAP,CHIP,MAKER	ECZH0000813	100 pF,50V ,J ,NP0 ,TC ,1005 ,R/TP		
6	C130	CAP,CHIP,MAKER	ECZH0000830	33 pF,50V ,J ,NP0 ,TC ,1005 ,R/TP		
6	C131	CAP,CERAMIC,CHIP	ECCH0009101	0.1 uF,6.3V ,K ,X5R ,TC ,0603 ,R/TP		
6	C132	CAP,CERAMIC,CHIP	ECCH0009206	68 pF,25V ,J ,X7R ,TC ,0603 ,R/TP		
6	C133	CAP,CERAMIC,CHIP	ECCH0009216	22 pF,25V ,J ,X7R ,TC ,0603 ,R/TP		

Level	Location No.	Description	Part Number	Spec	Color	Remark
6	C134	CAP,CERAMIC,CHIP	ECCH0009101	0.1 uF,6.3V ,K ,X5R ,TC ,0603 ,R/TP		
6	C135	CAP,CERAMIC,CHIP	ECCH0005604	10000000 pF,6.3V ,M ,X5R ,TC ,1608 ,R/TP , , ,[empty] ,[empty] ,[empty] ,[empty] ,[empty] ,[empty] ,0.8 mm		
6	C136	CAP,CHIP,MAKER	ECZH0025920	1 nF,16V ,K ,X7R ,HD ,0603 ,R/TP , , ,[empty] ,[empty] ,[empty] ,[empty] ,[empty] ,[empty]		
6	C137	CAP,CERAMIC,CHIP	ECCH0009101	0.1 uF,6.3V ,K ,X5R ,TC ,0603 ,R/TP		
6	C138	CAP,CERAMIC,CHIP	ECCH0009101	0.1 uF,6.3V ,K ,X5R ,TC ,0603 ,R/TP		
6	C139	INDUCTOR,CHIP	ELCH0004705	8.2 nH,J ,1005 ,R/TP ,		
6	C140	CAP,CERAMIC,CHIP	ECCH0017601	4.7 uF,6.3V ,M ,X5R ,HD ,1005 ,R/TP ,; , ,20% ,6.3V ,X5R ,-55TO+85C ,1005 ,R/TP , mm		
6	C141	CAP,CERAMIC,CHIP	ECCH0017601	4.7 uF,6.3V ,M ,X5R ,HD ,1005 ,R/TP ,; , ,20% ,6.3V ,X5R ,-55TO+85C ,1005 ,R/TP , mm		
6	C142	CAP,CERAMIC,CHIP	ECCH0009101	0.1 uF,6.3V ,K ,X5R ,TC ,0603 ,R/TP		
6	C143	CAP,CERAMIC,CHIP	ECCH0009101	0.1 uF,6.3V ,K ,X5R ,TC ,0603 ,R/TP		
6	C144	CAP,CERAMIC,CHIP	ECCH0009216	22 pF,25V ,J ,X7R ,TC ,0603 ,R/TP		
6	C145	CAP,CERAMIC,CHIP	ECCH0009103	100 pF,50V ,J ,X7R ,TC ,0603 ,R/TP , , ,[empty] ,[empty] ,C0G ,[empty] ,[empty] ,[empty] ,0.3 mm		
6	C146	CAP,CERAMIC,CHIP	ECCH0009101	0.1 uF,6.3V ,K ,X5R ,TC ,0603 ,R/TP		
6	C147	CAP,CERAMIC,CHIP	ECCH0009216	22 pF,25V ,J ,X7R ,TC ,0603 ,R/TP		
6	C149	CAP,CERAMIC,CHIP	ECCH0009226	39 pF,25V ,J ,X7R ,TC ,0603 ,R/TP		
6	C150	INDUCTOR,CHIP	ELCH0004705	8.2 nH,J ,1005 ,R/TP ,		
6	C151	INDUCTOR,CHIP	ELCH0004705	8.2 nH,J ,1005 ,R/TP ,		
6	C152	CAP,CERAMIC,CHIP	ECCH0009104	33 pF,50V ,J ,X7R ,TC ,0603 ,R/TP		
6	C153	CAP,CHIP,MAKER	ECZH0025920	1 nF,16V ,K ,X7R ,HD ,0603 ,R/TP , , ,[empty] ,[empty] ,[empty] ,[empty] ,[empty] ,[empty]		
6	C154	CAP,CERAMIC,CHIP	ECCH0009216	22 pF,25V ,J ,X7R ,TC ,0603 ,R/TP		
6	C155	CAP,CHIP,MAKER	ECZH0025920	1 nF,16V ,K ,X7R ,HD ,0603 ,R/TP , , ,[empty] ,[empty] ,[empty] ,[empty] ,[empty] ,[empty]		
6	C157	INDUCTOR,CHIP	ELCH0004715	27 nH,J ,1005 ,R/TP ,		
6	C159	CAP,CHIP,MAKER	ECZH0000830	33 pF,50V ,J ,NP0 ,TC ,1005 ,R/TP		
6	C160	INDUCTOR,CHIP	ELCH0004703	1 nH,S ,1005 ,R/TP ,		
6	C162	CAP,CHIP,MAKER	ECZH0025920	1 nF,16V ,K ,X7R ,HD ,0603 ,R/TP , , ,[empty] ,[empty] ,[empty] ,[empty] ,[empty] ,[empty]		
6	C163	CAP,CERAMIC,CHIP	ECCH0000195	3.9 pF,50V ,C ,NP0 ,TC ,1005 ,R/TP		
6	C164	CAP,CHIP,MAKER	ECZH0025920	1 nF,16V ,K ,X7R ,HD ,0603 ,R/TP , , ,[empty] ,[empty] ,[empty] ,[empty] ,[empty] ,[empty]		
6	C165	CAP,CHIP,MAKER	ECZH0000813	100 pF,50V ,J ,NP0 ,TC ,1005 ,R/TP		

Level	Location No.	Description	Part Number	Spec	Color	Remark
6	C166	CAP,CHIP,MAKER	ECZH0000830	33 pF,50V ,J ,NP0 ,TC ,1005 ,R/TP		
6	C167	INDUCTOR,CHIP	ELCH0004704	4.7 nH,S ,1005 ,R/TP ,		
6	C168	INDUCTOR,CHIP	ELCH0004710	15 nH,J ,1005 ,R/TP ,		
6	C170	CAP,CERAMIC,CHIP	ECCH0000195	3.9 pF,50V ,C ,NP0 ,TC ,1005 ,R/TP		
6	C175	CAP,CHIP,MAKER	ECZH0000813	100 pF,50V ,J ,NP0 ,TC ,1005 ,R/TP		
6	C176	INDUCTOR,CHIP	ELCH0004727	100 nH,J ,1005 ,R/TP ,		
6	C177	CAP,CHIP,MAKER	ECZH0000830	33 pF,50V ,J ,NP0 ,TC ,1005 ,R/TP		
6	C178	CAP,CHIP,MAKER	ECZH0000830	33 pF,50V ,J ,NP0 ,TC ,1005 ,R/TP		
6	C179	CAP,CHIP,MAKER	ECZH0025917	47 pF,25V ,J ,NP0 ,TC ,0603 ,R/TP		
6	C181	INDUCTOR,CHIP	ELCH0004720	1.2 nH,S ,1005 ,R/TP ,		
6	C182	CAP,CERAMIC,CHIP	ECCH0009106	10 nF,16V ,K ,X7R ,TC ,0603 ,R/TP		
6	C183	CAP,CHIP,MAKER	ECZH0000839	4.7 pF,50V ,C ,NP0 ,TC ,1005 ,R/TP		
6	C184	CAP,CHIP,MAKER	ECZH0000830	33 pF,50V ,J ,NP0 ,TC ,1005 ,R/TP		
6	C185	CAP,CHIP,MAKER	ECZH0000830	33 pF,50V ,J ,NP0 ,TC ,1005 ,R/TP		
6	C186	CAP,CERAMIC,CHIP	ECCH0000175	2.7 pF,50V ,B ,NP0 ,TC ,1005 ,R/TP		
6	C188	INDUCTOR,CHIP	ELCH0004703	1 nH,S ,1005 ,R/TP ,		
6	C189	CAP,CHIP,MAKER	ECZH0000844	68 pF,50V ,J ,NP0 ,TC ,1005 ,R/TP		
6	C191	INDUCTOR,CHIP	ELCH0004709	3.3 nH,S ,1005 ,R/TP ,		
6	C192	CAP,CHIP,MAKER	ECZH0000830	33 pF,50V ,J ,NP0 ,TC ,1005 ,R/TP		
6	C193	CAP,CERAMIC,CHIP	ECCH0000175	2.7 pF,50V ,B ,NP0 ,TC ,1005 ,R/TP		
6	C194	CAP,CHIP,MAKER	ECZH0000830	33 pF,50V ,J ,NP0 ,TC ,1005 ,R/TP		
6	C195	INDUCTOR,CHIP	ELCH0001054	5.6 nH,S ,1005 ,R/TP ,PBFREE		
6	C202	CAP,CERAMIC,CHIP	ECCH0009106	10 nF,16V ,K ,X7R ,TC ,0603 ,R/TP		
6	C203	CAP,CERAMIC,CHIP	ECCH0009101	0.1 uF,6.3V ,K ,X5R ,TC ,0603 ,R/TP		
6	C204	CAP,CERAMIC,CHIP	ECCH0009101	0.1 uF,6.3V ,K ,X5R ,TC ,0603 ,R/TP		
6	C205	CAP,CERAMIC,CHIP	ECCH0009101	0.1 uF,6.3V ,K ,X5R ,TC ,0603 ,R/TP		
6	C206	CAP,CERAMIC,CHIP	ECCH0009101	0.1 uF,6.3V ,K ,X5R ,TC ,0603 ,R/TP		
6	C207	CAP,CERAMIC,CHIP	ECCH0000137	330 pF,50V ,K ,X7R ,HD ,1005 ,R/TP		
6	C209	CAP,CERAMIC,CHIP	ECCH0005602	2.2 uF,16V ,K ,X5R ,HD ,1608 ,R/TP		
6	C210	CAP,CERAMIC,CHIP	ECCH0000137	330 pF,50V ,K ,X7R ,HD ,1005 ,R/TP		
6	C213	CAP,CERAMIC,CHIP	ECCH0005602	2.2 uF,16V ,K ,X5R ,HD ,1608 ,R/TP		
6	C214	CAP,CERAMIC,CHIP	ECCH0000143	1 nF,50V,K,X7R,HD,1005,R/TP		

Level	Location No.	Description	Part Number	Spec	Color	Remark
6	C215	CAP,CHIP,MAKER	ECZH0001122	680 pF,50V ,K ,X7R ,HD ,1005 ,R/TP		
6	C216	CAP,CHIP,MAKER	ECZH0001122	680 pF,50V ,K ,X7R ,HD ,1005 ,R/TP		
6	C217	CAP,CERAMIC,CHIP	ECCH0000143	1 nF,50V,K,X7R,HD,1005,R/TP		
6	C218	CAP,CERAMIC,CHIP	ECCH0000143	1 nF,50V,K,X7R,HD,1005,R/TP		
6	C219	CAP,CERAMIC,CHIP	ECCH0000143	1 nF,50V,K,X7R,HD,1005,R/TP		
6	C220	CAP,CERAMIC,CHIP	ECCH0000137	330 pF,50V ,K ,X7R ,HD ,1005 ,R/TP		
6	C222	CAP,CERAMIC,CHIP	ECCH0000143	1 nF,50V,K,X7R,HD,1005,R/TP		
6	C223	CAP,CERAMIC,CHIP	ECCH0005602	2.2 uF,16V ,K ,X5R ,HD ,1608 ,R/TP		
6	C224	CAP,CERAMIC,CHIP	ECCH0000137	330 pF,50V ,K ,X7R ,HD ,1005 ,R/TP		
6	C225	CAP,CERAMIC,CHIP	ECCH0000143	1 nF,50V,K,X7R,HD,1005,R/TP		
6	C226	CAP,CHIP,MAKER	ECZH0000813	100 pF,50V ,J ,NP0 ,TC ,1005 ,R/TP		
6	C228	CAP,CERAMIC,CHIP	ECCH0005602	2.2 uF,16V ,K ,X5R ,HD ,1608 ,R/TP		
6	C238	CAP,CERAMIC,CHIP	ECCH0009216	22 pF,25V ,J ,X7R ,TC ,0603 ,R/TP		
6	C250	CAP,CERAMIC,CHIP	ECCH0010501	7.5 pF,50V ,D ,X7R ,TC ,1005 ,R/TP ,; ,C0G TYPE(No X7R) ,[empty] ,[empty] ,[empty] ,[empty] ,[empty] ,[empty]		
6	C251	CAP,CERAMIC,CHIP	ECCH0000147	2.2 nF,50V,K,X7R,HD,1005,R/TP		
6	C252	CAP,CERAMIC,CHIP	ECCH0002001	0.1 uF,6.3V ,K ,B ,HD ,1005 ,R/TP , , ,[empty] ,[empty] ,[empty] ,[empty] ,[empty] ,[empty] ,.5 mm		
6	C253	CAP,CERAMIC,CHIP	ECCH0002001	0.1 uF,6.3V ,K ,B ,HD ,1005 ,R/TP , , ,[empty] ,[empty] ,[empty] ,[empty] ,[empty] ,[empty] ,.5 mm		
6	C254	CAP,CERAMIC,CHIP	ECCH0002001	0.1 uF,6.3V ,K ,B ,HD ,1005 ,R/TP , , ,[empty] ,[empty] ,[empty] ,[empty] ,[empty] ,[empty] ,.5 mm		
6	C255	CAP,CERAMIC,CHIP	ECCH0002001	0.1 uF,6.3V ,K ,B ,HD ,1005 ,R/TP , , ,[empty] ,[empty] ,[empty] ,[empty] ,[empty] ,[empty] ,.5 mm		
6	C256	CAP,CERAMIC,CHIP	ECCH0002001	0.1 uF,6.3V ,K ,B ,HD ,1005 ,R/TP , , ,[empty] ,[empty] ,[empty] ,[empty] ,[empty] ,[empty] ,.5 mm		
6	C257	CAP,CERAMIC,CHIP	ECCH0002001	0.1 uF,6.3V ,K ,B ,HD ,1005 ,R/TP , , ,[empty] ,[empty] ,[empty] ,[empty] ,[empty] ,[empty] ,.5 mm		
6	C258	CAP,CERAMIC,CHIP	ECCH0002001	0.1 uF,6.3V ,K ,B ,HD ,1005 ,R/TP , , ,[empty] ,[empty] ,[empty] ,[empty] ,[empty] ,[empty] ,.5 mm		
6	C259	CAP,CERAMIC,CHIP	ECCH0002001	0.1 uF,6.3V ,K ,B ,HD ,1005 ,R/TP , , ,[empty] ,[empty] ,[empty] ,[empty] ,[empty] ,[empty] ,.5 mm		
6	C260	CAP,CERAMIC,CHIP	ECCH0002001	0.1 uF,6.3V ,K ,B ,HD ,1005 ,R/TP , , ,[empty] ,[empty] ,[empty] ,[empty] ,[empty] ,[empty] ,.5 mm		
6	C262	CAP,CERAMIC,CHIP	ECCH0000122	47 pF,50V,J,NP0,TC,1005,R/TP		
6	C263	CAP,CERAMIC,CHIP	ECCH0002001	0.1 uF,6.3V ,K ,B ,HD ,1005 ,R/TP , , ,[empty] ,[empty] ,[empty] ,[empty] ,[empty] ,[empty] ,.5 mm		
6	C264	CAP,TANTAL,CHIP	ECTH0001903	22 uF,6.3V ,M ,L_ESR ,1608 ,R/TP		

Level	Location No.	Description	Part Number	Spec	Color	Remark
6	C265	CAP,CHIP,MAKER	ECZH0000813	100 pF,50V ,J ,NP0 ,TC ,1005 ,R/TP		
6	C266	CAP,CERAMIC,CHIP	ECCH0000143	1 nF,50V,K,X7R,HD,1005,R/TP		
6	C267	CAP,CERAMIC,CHIP	ECCH0000155	10 nF,16V,K,X7R,HD,1005,R/TP		
6	C268	CAP,CERAMIC,CHIP	ECCH0002001	0.1 uF,6.3V ,K ,B ,HD ,1005 ,R/TP , , ,[empty] ,[empty] ,[empty] ,[empty] ,[empty] ,[empty] ,.5 mm		
6	C269	CAP,CERAMIC,CHIP	ECCH0000143	1 nF,50V,K,X7R,HD,1005,R/TP		
6	C270	CAP,CHIP,MAKER	ECZH0000830	33 pF,50V ,J ,NP0 ,TC ,1005 ,R/TP		
6	C271	CAP,CHIP,MAKER	ECZH0000813	100 pF,50V ,J ,NP0 ,TC ,1005 ,R/TP		
6	C272	CAP,CHIP,MAKER	ECZH0003103	0.1 uF,10V ,K ,X7R ,HD ,1005 ,R/TP		
6	C273	CAP,CERAMIC,CHIP	ECCH0000161	33 nF,16V,K,X7R,HD,1005,R/TP		
6	C274	CAP,CHIP,MAKER	ECZH0004402	0.1 uF,16V ,Z ,X7R ,TC ,1005 ,R/TP , , ,[empty] ,[empty] ,[empty] ,[empty] ,[empty] ,[empty]		
6	C275	CAP,CERAMIC,CHIP	ECCH0000122	47 pF,50V,J,NP0,TC,1005,R/TP		
6	C276	CAP,CHIP,MAKER	ECZH0003103	0.1 uF,10V ,K ,X7R ,HD ,1005 ,R/TP		
6	C277	CAP,CERAMIC,CHIP	ECCH0010501	7.5 pF,50V ,D ,X7R ,TC ,1005 ,R/TP ,; ,C0G TYPE(No X7R) ,[empty] ,[empty] ,[empty] ,[empty] ,[empty] ,[empty]		
6	C279	CAP,CHIP,MAKER	ECZH0000803	2 pF,50V ,C ,NP0 ,TC ,1005 ,R/TP		
6	C300	CAP,CHIP,MAKER	ECZH0003103	0.1 uF,10V ,K ,X7R ,HD ,1005 ,R/TP		
6	C301	CAP,CERAMIC,CHIP	ECCH0000155	10 nF,16V,K,X7R,HD,1005,R/TP		
6	C302	CAP,CERAMIC,CHIP	ECCH0002001	0.1 uF,6.3V ,K ,B ,HD ,1005 ,R/TP , , ,[empty] ,[empty] ,[empty] ,[empty] ,[empty] ,[empty] ,.5 mm		
6	C303	CAP,CERAMIC,CHIP	ECCH0005604	10000000 pF,6.3V ,M ,X5R ,TC ,1608 ,R/TP , , ,[empty] ,[empty] ,[empty] ,[empty] ,[empty] ,[empty] ,0.8 mm		
6	C304	CAP,CERAMIC,CHIP	ECCH0000155	10 nF,16V,K,X7R,HD,1005,R/TP		
6	C305	CAP,CERAMIC,CHIP	ECCH0000143	1 nF,50V,K,X7R,HD,1005,R/TP		
6	C306	CAP,CHIP,MAKER	ECZH0003103	0.1 uF,10V ,K ,X7R ,HD ,1005 ,R/TP		
6	C307	CAP,CERAMIC,CHIP	ECCH0000143	1 nF,50V,K,X7R,HD,1005,R/TP		
6	C308	CAP,CERAMIC,CHIP	ECCH0000143	1 nF,50V,K,X7R,HD,1005,R/TP		
6	C309	CAP,CERAMIC,CHIP	ECCH0005604	10000000 pF,6.3V ,M ,X5R ,TC ,1608 ,R/TP , , ,[empty] ,[empty] ,[empty] ,[empty] ,[empty] ,[empty] ,0.8 mm		
6	C310	CAP,CHIP,MAKER	ECZH0003103	0.1 uF,10V ,K ,X7R ,HD ,1005 ,R/TP		
6	C311	CAP,CERAMIC,CHIP	ECCH0000143	1 nF,50V,K,X7R,HD,1005,R/TP		
6	C312	CAP,CERAMIC,CHIP	ECCH0000143	1 nF,50V,K,X7R,HD,1005,R/TP		
6	C313	CAP,CERAMIC,CHIP	ECCH0000155	10 nF,16V,K,X7R,HD,1005,R/TP		
6	C314	CAP,CERAMIC,CHIP	ECCH0000143	1 nF,50V,K,X7R,HD,1005,R/TP		

Level	Location No.	Description	Part Number	Spec	Color	Remark
6	C315	CAP,CERAMIC,CHIP	ECCH0005604	10000000 pF,6.3V ,M ,X5R ,TC ,1608 ,R/TP , , ,[empty] ,[empty] ,[empty] ,[empty] ,[empty] ,[empty] ,0.8 mm		
6	C316	CAP,CERAMIC,CHIP	ECCH0000143	1 nF,50V,K,X7R,HD,1005,R/TP		
6	C317	CAP,CHIP,MAKER	ECZH0003103	0.1 uF,10V ,K ,X7R ,HD ,1005 ,R/TP		
6	C318	CAP,CERAMIC,CHIP	ECCH0000155	10 nF,16V,K,X7R,HD,1005,R/TP		
6	C319	CAP,CERAMIC,CHIP	ECCH0000155	10 nF,16V,K,X7R,HD,1005,R/TP		
6	C320	CAP,CERAMIC,CHIP	ECCH0000155	10 nF,16V,K,X7R,HD,1005,R/TP		
6	C321	CAP,CERAMIC,CHIP	ECCH0000143	1 nF,50V,K,X7R,HD,1005,R/TP		
6	C322	CAP,CERAMIC,CHIP	ECCH0005604	10000000 pF,6.3V ,M ,X5R ,TC ,1608 ,R/TP , , ,[empty] ,[empty] ,[empty] ,[empty] ,[empty] ,[empty] ,0.8 mm		
6	C323	CAP,CHIP,MAKER	ECZH0003103	0.1 uF,10V ,K ,X7R ,HD ,1005 ,R/TP		
6	C324	CAP,CHIP,MAKER	ECZH0003103	0.1 uF,10V ,K ,X7R ,HD ,1005 ,R/TP		
6	C325	CAP,CERAMIC,CHIP	ECCH0000155	10 nF,16V,K,X7R,HD,1005,R/TP		
6	C326	CAP,CERAMIC,CHIP	ECCH0000143	1 nF,50V,K,X7R,HD,1005,R/TP		
6	C327	CAP,CHIP,MAKER	ECZH0003103	0.1 uF,10V ,K ,X7R ,HD ,1005 ,R/TP		
6	C328	CAP,CHIP,MAKER	ECZH0003103	0.1 uF,10V ,K ,X7R ,HD ,1005 ,R/TP		
6	C329	CAP,CHIP,MAKER	ECZH0025502	22000000 pF,6.3V ,M ,X5R ,HD ,2012 ,R/TP ,; ,0.85t ,[empty] ,[empty] ,[empty] ,[empty] ,[empty] ,[empty]		
6	C330	CAP,CERAMIC,CHIP	ECCH0004904	1 uF,6.3V ,K ,X5R ,TC ,1005 ,R/TP		
6	C331	CAP,CHIP,MAKER	ECZH0003103	0.1 uF,10V ,K ,X7R ,HD ,1005 ,R/TP		
6	C332	CAP,CERAMIC,CHIP	ECCH0005604	10000000 pF,6.3V ,M ,X5R ,TC ,1608 ,R/TP , , ,[empty] ,[empty] ,[empty] ,[empty] ,[empty] ,[empty] ,0.8 mm		
6	C333	CAP,CERAMIC,CHIP	ECCH0000155	10 nF,16V,K,X7R,HD,1005,R/TP		
6	C334	CAP,CHIP,MAKER	ECZH0003103	0.1 uF,10V ,K ,X7R ,HD ,1005 ,R/TP		
6	C335	CAP,CERAMIC,CHIP	ECCH0000143	1 nF,50V,K,X7R,HD,1005,R/TP		
6	C336	CAP,CHIP,MAKER	ECZH0003103	0.1 uF,10V ,K ,X7R ,HD ,1005 ,R/TP		
6	C337	CAP,CERAMIC,CHIP	ECCH0000198	2.2 uF,6.3V ,M ,X5R ,TC ,1005 ,R/TP		
6	C338	CAP,CERAMIC,CHIP	ECCH0004904	1 uF,6.3V ,K ,X5R ,TC ,1005 ,R/TP		
6	C339	CAP,CERAMIC,CHIP	ECCH0000198	2.2 uF,6.3V ,M ,X5R ,TC ,1005 ,R/TP		
6	C340	CAP,CERAMIC,CHIP	ECCH0000198	2.2 uF,6.3V ,M ,X5R ,TC ,1005 ,R/TP		
6	C341	CAP,CERAMIC,CHIP	ECCH0004904	1 uF,6.3V ,K ,X5R ,TC ,1005 ,R/TP		
6	C342	CAP,CERAMIC,CHIP	ECCH0000198	2.2 uF,6.3V ,M ,X5R ,TC ,1005 ,R/TP		
6	C343	CAP,CERAMIC,CHIP	ECCH0000198	2.2 uF,6.3V ,M ,X5R ,TC ,1005 ,R/TP		
6	C344	CAP,CERAMIC,CHIP	ECCH0002001	0.1 uF,6.3V ,K ,B ,HD ,1005 ,R/TP , , ,[empty] ,[empty] ,[empty] ,[empty] ,[empty] ,[empty] ,.5 mm		

Level	Location No.	Description	Part Number	Spec	Color	Remark
6	C345	CAP,CERAMIC,CHIP	ECCH0000155	10 nF,16V,K,X7R,HD,1005,R/TP		
6	C346	CAP,CERAMIC,CHIP	ECCH0000143	1 nF,50V,K,X7R,HD,1005,R/TP		
6	C347	CAP,CERAMIC,CHIP	ECCH0000143	1 nF,50V,K,X7R,HD,1005,R/TP		
6	C400	CAP,CERAMIC,CHIP	ECCH0000198	2.2 uF,6.3V ,M ,X5R ,TC ,1005 ,R/TP		
6	C402	CAP,CHIP,MAKER	ECZH0001215	1 uF,10V ,K ,X5R ,TC ,1005 ,R/TP		
6	C403	CAP,CERAMIC,CHIP	ECCH0005602	2.2 uF,16V ,K ,X5R ,HD ,1608 ,R/TP		
6	C404	CAP,CERAMIC,CHIP	ECCH0000115	22 pF,50V,J,NP0,TC,1005,R/TP		
6	C405	CAP,CERAMIC,CHIP	ECCH0000115	22 pF,50V,J,NP0,TC,1005,R/TP		
6	C406	CAP,CHIP,MAKER	ECZH0003103	0.1 uF,10V ,K ,X7R ,HD ,1005 ,R/TP		
6	C407	CAP,CERAMIC,CHIP	ECCH0000115	22 pF,50V,J,NP0,TC,1005,R/TP		
6	C408	CAP,CHIP,MAKER	ECZH0003103	0.1 uF,10V ,K ,X7R ,HD ,1005 ,R/TP		
6	C409	CAP,CERAMIC,CHIP	ECCH0000155	10 nF,16V,K,X7R,HD,1005,R/TP		
6	C410	CAP,TANTAL,CHIP	ECTH0005703	22 uF,10V ,M ,L_ESR ,2012 ,R/TP ,; , ,[empty] ,[empty] ,[empty] , ,[empty] ,[empty] ,[empty] ,[empty]		
6	C411	CAP,CERAMIC,CHIP	ECCH0007804	2.2 uF,10V ,M ,X5R ,HD ,1005 ,R/TP ,; , ,[empty] ,[empty] ,[empty] ,[empty] ,[empty] ,[empty] ,0.5 mm		
6	C412	CAP,CERAMIC,CHIP	ECCH0004904	1 uF,6.3V ,K ,X5R ,TC ,1005 ,R/TP		
6	C413	CAP,CERAMIC,CHIP	ECCH0000115	22 pF,50V,J,NP0,TC,1005,R/TP		
6	C414	CAP,CHIP,MAKER	ECZH0001215	1 uF,10V ,K ,X5R ,TC ,1005 ,R/TP		
6	C415	CAP,CHIP,MAKER	ECZH0003103	0.1 uF,10V ,K ,X7R ,HD ,1005 ,R/TP		
6	C416	CAP,CHIP,MAKER	ECZH0003103	0.1 uF,10V ,K ,X7R ,HD ,1005 ,R/TP		
6	C417	CAP,CERAMIC,CHIP	ECCH0000198	2.2 uF,6.3V ,M ,X5R ,TC ,1005 ,R/TP		
6	C418	CAP,CERAMIC,CHIP	ECCH0005604	10000000 pF,6.3V ,M ,X5R ,TC ,1608 ,R/TP , , ,[empty] ,[empty] ,[empty] ,[empty] ,[empty] ,[empty] ,0.8 mm		
6	C419	CAP,CHIP,MAKER	ECZH0003103	0.1 uF,10V ,K ,X7R ,HD ,1005 ,R/TP		
6	C420	CAP,CERAMIC,CHIP	ECCH0000143	1 nF,50V,K,X7R,HD,1005,R/TP		
6	C421	CAP,CERAMIC,CHIP	ECCH0007802	4.7 uF,10V ,M ,X5R ,TC ,1608 ,R/TP		
6	C422	CAP,CERAMIC,CHIP	ECCH0000198	2.2 uF,6.3V ,M ,X5R ,TC ,1005 ,R/TP		
6	C423	CAP,CHIP,MAKER	ECZH0000830	33 pF,50V ,J ,NP0 ,TC ,1005 ,R/TP		
6	C424	CAP,CHIP,MAKER	ECZH0003103	0.1 uF,10V ,K ,X7R ,HD ,1005 ,R/TP		
6	C425	CAP,CERAMIC,CHIP	ECCH0000198	2.2 uF,6.3V ,M ,X5R ,TC ,1005 ,R/TP		
6	C426	CAP,CERAMIC,CHIP	ECCH0000143	1 nF,50V,K,X7R,HD,1005,R/TP		
6	C427	CAP,CERAMIC,CHIP	ECCH0000198	2.2 uF,6.3V ,M ,X5R ,TC ,1005 ,R/TP		

Level	Location No.	Description	Part Number	Spec	Color	Remark
6	C428	CAP,CERAMIC,CHIP	ECCH0000198	2.2 uF,6.3V ,M ,X5R ,TC ,1005 ,R/TP		
6	C429	CAP,CERAMIC,CHIP	ECCH0000143	1 nF,50V,K,X7R,HD,1005,R/TP		
6	C430	CAP,CERAMIC,CHIP	ECCH0000198	2.2 uF,6.3V ,M ,X5R ,TC ,1005 ,R/TP		
6	C431	CAP,CHIP,MAKER	ECZH0000830	33 pF,50V ,J ,NP0 ,TC ,1005 ,R/TP		
6	C432	CAP,CERAMIC,CHIP	ECCH0000143	1 nF,50V,K,X7R,HD,1005,R/TP		
6	C433	CAP,CERAMIC,CHIP	ECCH0000143	1 nF,50V,K,X7R,HD,1005,R/TP		
6	C434	CAP,CHIP,MAKER	ECZH0003103	0.1 uF,10V ,K ,X7R ,HD ,1005 ,R/TP		
6	C435	CAP,CERAMIC,CHIP	ECCH0000198	2.2 uF,6.3V ,M ,X5R ,TC ,1005 ,R/TP		
6	C436	CAP,CERAMIC,CHIP	ECCH0006201	4.7 uF,6.3V ,K ,X5R ,TC ,1608 ,R/TP		
6	C437	CAP,CERAMIC,CHIP	ECCH0000198	2.2 uF,6.3V ,M ,X5R ,TC ,1005 ,R/TP		
6	C438	CAP,CHIP,MAKER	ECZH0003103	0.1 uF,10V ,K ,X7R ,HD ,1005 ,R/TP		
6	C439	CAP,CERAMIC,CHIP	ECCH0005604	10000000 pF,6.3V ,M ,X5R ,TC ,1608 ,R/TP , , ,[empty] ,[empty] ,[empty] ,[empty] ,[empty] ,[empty] ,0.8 mm		
6	C440	CAP,CERAMIC,CHIP	ECCH0000198	2.2 uF,6.3V ,M ,X5R ,TC ,1005 ,R/TP		
6	C441	CAP,CHIP,MAKER	ECZH0003103	0.1 uF,10V ,K ,X7R ,HD ,1005 ,R/TP		
6	C442	CAP,CHIP,MAKER	ECZH0003103	0.1 uF,10V ,K ,X7R ,HD ,1005 ,R/TP		
6	C443	CAP,CERAMIC,CHIP	ECCH0000143	1 nF,50V,K,X7R,HD,1005,R/TP		
6	C444	CAP,CERAMIC,CHIP	ECCH0004904	1 uF,6.3V ,K ,X5R ,TC ,1005 ,R/TP		
6	C445	CAP,CERAMIC,CHIP	ECCH0004904	1 uF,6.3V ,K ,X5R ,TC ,1005 ,R/TP		
6	C446	CAP,CERAMIC,CHIP	ECCH0006201	4.7 uF,6.3V ,K ,X5R ,TC ,1608 ,R/TP		
6	C447	CAP,CHIP,MAKER	ECZH0003103	0.1 uF,10V ,K ,X7R ,HD ,1005 ,R/TP		
6	C448	CAP,CERAMIC,CHIP	ECCH0006201	4.7 uF,6.3V ,K ,X5R ,TC ,1608 ,R/TP		
6	C449	CAP,CERAMIC,CHIP	ECCH0000198	2.2 uF,6.3V ,M ,X5R ,TC ,1005 ,R/TP		
6	C450	CAP,CERAMIC,CHIP	ECCH0000198	2.2 uF,6.3V ,M ,X5R ,TC ,1005 ,R/TP		
6	C452	CAP,CERAMIC,CHIP	ECCH0006201	4.7 uF,6.3V ,K ,X5R ,TC ,1608 ,R/TP		
6	C453	CAP,CHIP,MAKER	ECZH0003103	0.1 uF,10V ,K ,X7R ,HD ,1005 ,R/TP		
6	C454	CAP,CHIP,MAKER	ECZH0003103	0.1 uF,10V ,K ,X7R ,HD ,1005 ,R/TP		
6	C455	CAP,CHIP,MAKER	ECZH0003103	0.1 uF,10V ,K ,X7R ,HD ,1005 ,R/TP		
6	C456	CAP,CERAMIC,CHIP	ECCH0007802	4.7 uF,10V ,M ,X5R ,TC ,1608 ,R/TP		
6	C457	CAP,CHIP,MAKER	ECZH0003103	0.1 uF,10V ,K ,X7R ,HD ,1005 ,R/TP		
6	C458	CAP,CERAMIC,CHIP	ECCH0000198	2.2 uF,6.3V ,M ,X5R ,TC ,1005 ,R/TP		

Level	Location No.	Description	Part Number	Spec	Color	Remark
6	C459	CAP,TANTAL,CHIP	ECTH0002002	33 uF,10V ,M ,L_ESR ,2012 ,R/TP ,; , ,[empty] ,[empty] , ,-55TO+125C , ,2.2X1.1X1.1MM ,[empty] ,[empty] ,[empty]		
6	C460	CAP,CERAMIC,CHIP	ECCH0000198	2.2 uF,6.3V ,M ,X5R ,TC ,1005 ,R/TP		
6	C461	CAP,CERAMIC,CHIP	ECCH0004904	1 uF,6.3V ,K ,X5R ,TC ,1005 ,R/TP		
6	C500	CAP,CERAMIC,CHIP	ECCH0004904	1 uF,6.3V ,K ,X5R ,TC ,1005 ,R/TP		
6	C501	CAP,CHIP,MAKER	ECZH0003103	0.1 uF,10V ,K ,X7R ,HD ,1005 ,R/TP		
6	C512	CAP,CERAMIC,CHIP	ECCH0000198	2.2 uF,6.3V ,M ,X5R ,TC ,1005 ,R/TP		
6	C513	CAP,CERAMIC,CHIP	ECCH0000198	2.2 uF,6.3V ,M ,X5R ,TC ,1005 ,R/TP		
6	C514	CAP,CHIP,MAKER	ECZH0001215	1 uF,10V ,K ,X5R ,TC ,1005 ,R/TP		
6	C515	CAP,CERAMIC,CHIP	ECCH0000120	39 pF,50V,J,NP0,TC,1005,R/TP		
6	C516	CAP,CERAMIC,CHIP	ECCH0007803	10 uF,10V ,M ,X5R ,HD ,1608 ,R/TP ,; , ,[empty] ,[empty] ,[empty] ,[empty] ,[empty] ,[empty] ,0.8 mm		
6	C517	CAP,CERAMIC,CHIP	ECCH0000198	2.2 uF,6.3V ,M ,X5R ,TC ,1005 ,R/TP		
6	C518	CAP,CHIP,MAKER	ECZH0001215	1 uF,10V ,K ,X5R ,TC ,1005 ,R/TP		
6	C519	CAP,CHIP,MAKER	ECZH0001215	1 uF,10V ,K ,X5R ,TC ,1005 ,R/TP		
6	C520	CAP,CERAMIC,CHIP	ECCH0002002	47000 pF,10V ,K ,B ,HD ,1005 ,R/TP		
6	C521	CAP,CERAMIC,CHIP	ECCH0002002	47000 pF,10V ,K ,B ,HD ,1005 ,R/TP		
6	C522	CAP,CERAMIC,CHIP	ECCH0000198	2.2 uF,6.3V ,M ,X5R ,TC ,1005 ,R/TP		
6	C523	CAP,CERAMIC,CHIP	ECCH0000198	2.2 uF,6.3V ,M ,X5R ,TC ,1005 ,R/TP		
6	C524	CAP,CERAMIC,CHIP	ECCH0000115	22 pF,50V,J,NP0,TC,1005,R/TP		
6	C525	CAP,CERAMIC,CHIP	ECCH0000115	22 pF,50V,J,NP0,TC,1005,R/TP		
6	C526	CAP,CERAMIC,CHIP	ECCH0000115	22 pF,50V,J,NP0,TC,1005,R/TP		
6	C527	CAP,CHIP,MAKER	ECZH0003103	0.1 uF,10V ,K ,X7R ,HD ,1005 ,R/TP		
6	C528	CAP,CERAMIC,CHIP	ECCH0000110	10 pF,50V,D,NP0,TC,1005,R/TP		
6	C530	CAP,CERAMIC,CHIP	ECCH0007804	2.2 uF,10V ,M ,X5R ,HD ,1005 ,R/TP ,; , ,[empty] ,[empty] ,[empty] ,[empty] ,[empty] ,[empty] ,0.5 mm		
6	C531	CAP,CHIP,MAKER	ECZH0003103	0.1 uF,10V ,K ,X7R ,HD ,1005 ,R/TP		
6	C532	CAP,CHIP,MAKER	ECZH0003103	0.1 uF,10V ,K ,X7R ,HD ,1005 ,R/TP		
6	C533	CAP,CHIP,MAKER	ECZH0003103	0.1 uF,10V ,K ,X7R ,HD ,1005 ,R/TP		
6	C534	CAP,CERAMIC,CHIP	ECCH0005604	10000000 pF,6.3V ,M ,X5R ,TC ,1608 ,R/TP , , ,[empty] ,[empty] ,[empty] ,[empty] ,[empty] ,[empty] ,0.8 mm		
6	C535	CAP,CERAMIC,CHIP	ECCH0017601	4.7 uF,6.3V ,M ,X5R ,HD ,1005 ,R/TP ,; , ,20% ,6.3V ,X5R ,-55TO+85C ,1005 ,R/TP , mm		
6	C536	CAP,CERAMIC,CHIP	ECCH0005604	10000000 pF,6.3V ,M ,X5R ,TC ,1608 ,R/TP , , ,[empty] ,[empty] ,[empty] ,[empty] ,[empty] ,[empty] ,0.8 mm		

Level	Location No.	Description	Part Number	Spec	Color	Remark
6	C537	CAP,CERAMIC,CHIP	ECCH0007802	4.7 uF,10V ,M ,X5R ,TC ,1608 ,R/TP		
6	C538	CAP,CERAMIC,CHIP	ECCH0000198	2.2 uF,6.3V ,M ,X5R ,TC ,1005 ,R/TP		
6	C539	CAP,CHIP,MAKER	ECZH0000822	1.5 pF,50V ,C ,NP0 ,TC ,1005 ,R/TP		
6	C540	CAP,CERAMIC,CHIP	ECCH0007802	4.7 uF,10V ,M ,X5R ,TC ,1608 ,R/TP		
6	C541	CAP,CERAMIC,CHIP	ECCH0007802	4.7 uF,10V ,M ,X5R ,TC ,1608 ,R/TP		
6	C542	CAP,CHIP,MAKER	ECZH0003103	0.1 uF,10V ,K ,X7R ,HD ,1005 ,R/TP		
6	C543	CAP,CHIP,MAKER	ECZH0003103	0.1 uF,10V ,K ,X7R ,HD ,1005 ,R/TP		
6	C545	CAP,CERAMIC,CHIP	ECCH0000143	1 nF,50V,K,X7R,HD,1005,R/TP		
6	C547	CAP,CERAMIC,CHIP	ECCH0004904	1 uF,6.3V ,K ,X5R ,TC ,1005 ,R/TP		
6	C548	CAP,CERAMIC,CHIP	ECCH0000143	1 nF,50V,K,X7R,HD,1005,R/TP		
6	C549	CAP,CERAMIC,CHIP	ECCH0004904	1 uF,6.3V ,K ,X5R ,TC ,1005 ,R/TP		
6	C550	CAP,CERAMIC,CHIP	ECCH0004904	1 uF,6.3V ,K ,X5R ,TC ,1005 ,R/TP		
6	C551	CAP,CHIP,MAKER	ECZH0001215	1 uF,10V ,K ,X5R ,TC ,1005 ,R/TP		
6	C552	CAP,CHIP,MAKER	ECZH0001215	1 uF,10V ,K ,X5R ,TC ,1005 ,R/TP		
6	C553	CAP,CHIP,MAKER	ECZH0003103	0.1 uF,10V ,K ,X7R ,HD ,1005 ,R/TP		
6	C554	CAP,CHIP,MAKER	ECZH0003103	0.1 uF,10V ,K ,X7R ,HD ,1005 ,R/TP		
6	C555	CAP,CERAMIC,CHIP	ECCH0000122	47 pF,50V,J,NP0,TC,1005,R/TP		
6	C556	CAP,CERAMIC,CHIP	ECCH0000122	47 pF,50V,J,NP0,TC,1005,R/TP		
6	C557	CAP,CERAMIC,CHIP	ECCH0000155	10 nF,16V,K,X7R,HD,1005,R/TP		
6	C558	CAP,CHIP,MAKER	ECZH0001215	1 uF,10V ,K ,X5R ,TC ,1005 ,R/TP		
6	C559	CAP,CERAMIC,CHIP	ECCH0007804	2.2 uF,10V ,M ,X5R ,HD ,1005 ,R/TP ,; , ,[empty] ,[empty] ,[empty] ,[empty] ,[empty] ,[empty] ,0.5 mm		
6	C600	CAP,CERAMIC,CHIP	ECCH0004904	1 uF,6.3V ,K ,X5R ,TC ,1005 ,R/TP		
6	C601	CAP,CERAMIC,CHIP	ECCH0004904	1 uF,6.3V ,K ,X5R ,TC ,1005 ,R/TP		
6	C602	CAP,CERAMIC,CHIP	ECCH0000198	2.2 uF,6.3V ,M ,X5R ,TC ,1005 ,R/TP		
6	C603	CAP,CERAMIC,CHIP	ECCH0000198	2.2 uF,6.3V ,M ,X5R ,TC ,1005 ,R/TP		
6	C604	CAP,CERAMIC,CHIP	ECCH0000198	2.2 uF,6.3V ,M ,X5R ,TC ,1005 ,R/TP		
6	C605	CAP,CERAMIC,CHIP	ECCH0000198	2.2 uF,6.3V ,M ,X5R ,TC ,1005 ,R/TP		
6	C606	CAP,CERAMIC,CHIP	ECCH0017601	4.7 uF,6.3V ,M ,X5R ,HD ,1005 ,R/TP ,; , ,20% ,6.3V ,X5R ,-55TO+85C ,1005 ,R/TP , mm		
6	C607	CAP,CERAMIC,CHIP	ECCH0000198	2.2 uF,6.3V ,M ,X5R ,TC ,1005 ,R/TP		
6	C608	CAP,CERAMIC,CHIP	ECCH0005602	2.2 uF,16V ,K ,X5R ,HD ,1608 ,R/TP		
6	C609	CAP,CHIP,MAKER	ECZH0001215	1 uF,10V ,K ,X5R ,TC ,1005 ,R/TP		

Level	Location No.	Description	Part Number	Spec	Color	Remark
6	C612	CAP,CERAMIC,CHIP	ECCH0002001	0.1 uF,6.3V ,K ,B ,HD ,1005 ,R/TP , , ,[empty] ,[empty] ,[empty] ,[empty] ,[empty] ,[empty] ,[empty] ,.5 mm		
6	C613	CAP,CERAMIC,CHIP	ECCH0002001	0.1 uF,6.3V ,K ,B ,HD ,1005 ,R/TP , , ,[empty] ,[empty] ,[empty] ,[empty] ,[empty] ,[empty] ,[empty] ,.5 mm		
6	CN250	CONNECTOR,BOARD TO BOARD	ENBY0045901	14 PIN,0.4 mm,STRAIGHT , , ,; , ,0.40MM ,STRAIGHT ,MALE ,SMD ,[empty] , ,		
6	CN400	CONNECTOR,I/O	ENRY0008801	5 , mm,ANGLE , , ,; , ,0.64MM ,ANGLE ,[empty] ,DIP ,[empty] ,		
6	CN401	CONNECTOR,ETC	ENZY0020402	3 ,2.5 mm,BOTTOM , ,		
6	CN502	CONNECTOR,BOARD TO BOARD	ENBY0033201	10 PIN,0.4 mm,ETC , ,H=1.5, P4S Socket		
6	CN504	CONNECTOR,BOARD TO BOARD	ENBY0058001	20 ,0.4 mm,STRAIGHT ,Gold , ,; ,20 ,0.40MM ,STRAIGHT ,FEMALE ,SMD ,[empty] ,3.0T ,		
6	CN601	CONNECTOR,BOARD TO BOARD	ENBY0034201	24 PIN,0.4 mm,ETC , ,GB042 H=1.0, Socket		
6	CN602	CONNECTOR,BOARD TO BOARD	ENBY0040301	34 PIN,0.4 mm,ETC , ,H=1.0, Socket		
6	CN605	CONNECTOR,BOARD TO BOARD	ENBY0018601	10 PIN,.4 mm,STRAIGHT , ,H=0.9, SOCKET		
6	D250	DIODE,SWITCHING	EDSY0010501	ESC ,30 V,100 mA,R/TP ,SWITCH DIODE		
6	D251	DIODE,SWITCHING	EDSY0010501	ESC ,30 V,100 mA,R/TP ,SWITCH DIODE		
6	D400	DIODE,TVS	EDTY0010101	SOD-923 ,5 V,300 mW,R/TP ,15pF ,; , ,5.8V(MIN) ,12.5V(1A) ,40A ,300mW ,[empty] ,[empty] ,2P ,2		
6	D401	DIODE,SWITCHING	EDSY0010501	ESC ,30 V,100 mA,R/TP ,SWITCH DIODE		
6	D500	DIODE,TVS	EDTY0009801	SOT-963 ,5 V,25 W,R/TP , ,; , , , , , ,[empty] ,[empty] ,2P ,1		
6	D600	DIODE,TVS	EDTY0010101	SOD-923 ,5 V,300 mW,R/TP ,15pF ,; , ,5.8V(MIN) ,12.5V(1A) ,40A ,300mW ,[empty] ,[empty] ,2P ,2		
6	D601	DIODE,TVS	EDTY0010101	SOD-923 ,5 V,300 mW,R/TP ,15pF ,; , ,5.8V(MIN) ,12.5V(1A) ,40A ,300mW ,[empty] ,[empty] ,2P ,2		
6	D602	DIODE,TVS	EDTY0010101	SOD-923 ,5 V,300 mW,R/TP ,15pF ,; , ,5.8V(MIN) ,12.5V(1A) ,40A ,300mW ,[empty] ,[empty] ,2P ,2		
6	D603	DIODE,TVS	EDTY0010101	SOD-923 ,5 V,300 mW,R/TP ,15pF ,; , ,5.8V(MIN) ,12.5V(1A) ,40A ,300mW ,[empty] ,[empty] ,2P ,2		
6	D604	DIODE,TVS	EDTY0010101	SOD-923 ,5 V,300 mW,R/TP ,15pF ,; , ,5.8V(MIN) ,12.5V(1A) ,40A ,300mW ,[empty] ,[empty] ,2P ,2		
6	D605	DIODE,TVS	EDTY0010101	SOD-923 ,5 V,300 mW,R/TP ,15pF ,; , ,5.8V(MIN) ,12.5V(1A) ,40A ,300mW ,[empty] ,[empty] ,2P ,2		
6	FL100	DUPLEXER,IMT	SDMY0003001	1950 MHz,2140 MHz,1.8 dB,2.2 dB,51 dB,41 dB,2.5*2.0*0.89 ,SMD ,Band1, SAW dup, Rx unbal ,; ,2140 ,2110 to 2170 ,1950 ,1920 to 1980 ,2.2 ,1.8 ,2.5x2.0x0.89 ,DUAL ,SMD ,R/TP		
6	FL101	FILTER,SAW	SFSY0024303	1960 MHz,1.4*1.1*0.6 ,SMD ,5pin, Unbal-Bal, 50//150		

Level	Location No.	Description	Part Number	Spec	Color	Remark
6	FL102	FILTER,SAW	SFSY0024302	1842.5 MHz,1.4*1.1*0.6 ,SMD ,5pin, Unbal-Bal, 50//150		
6	FL103	FILTER,SAW	SFSY0024301	942.5 MHz,1.4*1.1*0.6 ,SMD ,5pin, Unbal-Bal, 50//150		
6	FL104	FILTER,SAW	SFSY0030003	881.5 MHz,1.4*1.1*0.6 ,SMD ,869M~894M, IL 2.3, 5pin, U-B, 50-200_82, W-BAND V Rx ,; ,881.5 ,1.4*1.1*0.6 ,SMD ,R/TP		
6	FL105	FILTER,SAW	SFSY0035001	2140 MHz,1.4*1.1*0.45 ,SMD ,2110M~2170M, IL 2.3, 5pin, U-B, 50-100_20, WCDMA BAND I Rx ,; ,2140 ,1.4*1.1*0.45 ,SMD ,R/TP		
6	FL107	FILTER,SAW	SFSY0037601	897.5 MHz,1.4*1.1*0.4 ,SMD ,880M~915M, IL 3.6, 5pin, U-U, 50-50, W-BAND VIII Tx ,; ,897.5 ,1.4*1.1*0.4 ,SMD ,R/TP		
6	FL108	FILTER,SAW	SFSY0035101	1950 MHz,1.4*1.1*0.45 ,SMD ,1920M~1980M, IL 3.2, 5pin, U-U, 50-50, WCDMA BAND I Tx ,; ,1950 ,1.4*1.1*0.45 ,SMD ,R/TP		
6	FL109	DUPLEXER,IMT	SDMY0002801	897.5 MHz,942.5 MHz,2.9 dB,3.8 dB,55 dB,45 dB,2.5*2.0*0.94 ,SMD ,SAW, Band8, Rx balance type ,; ,942.5 ,925 to 960 ,897.5 ,880 to 915 ,3.8 ,2.9 ,2.5x2.0x0.94 ,DUAL ,SMD ,R/TP		
6	FL400	FILTER,EMI/POWER	SFEY0015301	SMD ,Pb-free_Bais ,; ,Filter,LCR		
6	FL600	FILTER,EMI/POWER	SFEY0015901	SMD ,ESD Common mode Filter ,; ,Filter,LCR		
6	FL601	FILTER,EMI/POWER	SFEY0011701	SMD ,SMD ,18 V,4ch. EMI_ESD Filter (10 Ohm,7.5pF)		
6	FL602	FILTER,EMI/POWER	SFEY0011701	SMD ,SMD ,18 V,4ch. EMI_ESD Filter (10 Ohm,7.5pF)		
6	FL603	FILTER,EMI/POWER	SFEY0011701	SMD ,SMD ,18 V,4ch. EMI_ESD Filter (10 Ohm,7.5pF)		
6	IC500	IC	EUSY0403901	WLCSP ,20 ,R/TP ,Mono Audio Subsystem ,; ,IC,Audio Sub System		
6	J500	CONN,SOCKET	ENSY0024701	8 ,ETC , ,2.54 mm,1,5t		
6	J501	CONN,JACK/PLUG,EARPHONE	ENJE0007601	,6 ,6.3x13x4.0t ,; ,[empty] ,4P ,ANGLE ,R/TP ,3.5pie ,BLACK ,		
6	L100	INDUCTOR,CHIP	ELCH0001052	18 nH,J ,1005 ,R/TP ,PBFREE		
6	L101	INDUCTOR,CHIP	ELCH0001052	18 nH,J ,1005 ,R/TP ,PBFREE		
6	L102	INDUCTOR,CHIP	ELCH0001048	10 nH,J ,1005 ,R/TP ,PBFREE		
6	L103	INDUCTOR,CHIP	ELCH0004701	12 nH,J ,1005 ,R/TP ,		
6	L104	CAP,CHIP,MAKER	ECZH0000813	100 pF,50V ,J ,NP0 ,TC ,1005 ,R/TP		
6	L105	INDUCTOR,CHIP	ELCH0004721	2.2 nH,S ,1005 ,R/TP ,		
6	L106	CAP,CERAMIC,CHIP	ECCH0000701	1.2 pF,50V ,C ,NP0 ,TC ,1005 ,R/TP		
6	L107	INDUCTOR,CHIP	ELCH0004727	100 nH,J ,1005 ,R/TP ,		
6	L108	INDUCTOR,CHIP	ELCH0005019	68 nH,J ,1005 ,R/TP ,		
6	L110	INDUCTOR,CHIP	ELCH0001036	5.6 nH,S ,1005 ,R/TP ,PBFREE		
6	L113	INDUCTOR,CHIP	ELCH0005019	68 nH,J ,1005 ,R/TP ,		

Level	Location No.	Description	Part Number	Spec	Color	Remark
6	L114	INDUCTOR,CHIP	ELCH0004705	8.2 nH,J ,1005 ,R/TP ,		
6	L115	INDUCTOR,CHIP	ELCH0001036	5.6 nH,S ,1005 ,R/TP ,PBFREE		
6	L116	INDUCTOR,CHIP	ELCH0004726	1.5 nH,J ,1005 ,R/TP ,		
6	L117	INDUCTOR,CHIP	ELCH0001036	5.6 nH,S ,1005 ,R/TP ,PBFREE		
6	L118	INDUCTOR,CHIP	ELCH0003844	2 nH,S ,1005 ,R/TP ,Chip coil		
6	L119	INDUCTOR,CHIP	ELCH0004726	1.5 nH,J ,1005 ,R/TP ,		
6	L124	INDUCTOR,CHIP	ELCH0001056	2.7 nH,S ,1005 ,R/TP ,PBFREE		
6	L125	INDUCTOR,CHIP	ELCH0004701	12 nH,J ,1005 ,R/TP ,		
6	L127	CAP,CHIP,MAKER	ECZH0001002	0.5 pF,50V ,B ,NP0 ,TC ,1005 ,R/TP		
6	L129	CAP,CHIP,MAKER	ECZH0000802	1 pF,50V ,C ,NP0 ,TC ,1005 ,R/TP		
6	L132	INDUCTOR,CHIP	ELCH0003847	1.8 nH,S ,1005 ,R/TP ,chip coil		
6	L135	INDUCTOR,CHIP	ELCH0004709	3.3 nH,S ,1005 ,R/TP ,		
6	L139	INDUCTOR,CHIP	ELCH0004703	1 nH,S ,1005 ,R/TP ,		
6	L400	INDUCTOR,SMD,POWER	ELCP0008012	4.7 uH,M ,2.5*2*1.2 ,R/TP ,Coil ,; ,4.7 ,20% ,; ,1.3 ,0.338 ,; ,; ,SHIELD ,2.5X2X1MM ,[empty] ,R/TP ,Inductor,Wire Wound,Chip		
6	L401	INDUCTOR,SMD,POWER	ELCP0008012	4.7 uH,M ,2.5*2*1.2 ,R/TP ,Coil ,; ,4.7 ,20% ,; ,1.3 ,0.338 ,; ,; ,SHIELD ,2.5X2X1MM ,[empty] ,R/TP ,Inductor,Wire Wound,Chip		
6	L402	INDUCTOR,SMD,POWER	ELCP0008012	4.7 uH,M ,2.5*2*1.2 ,R/TP ,Coil ,; ,4.7 ,20% ,; ,1.3 ,0.338 ,; ,; ,SHIELD ,2.5X2X1MM ,[empty] ,R/TP ,Inductor,Wire Wound,Chip		
6	L403	INDUCTOR,SMD,POWER	ELCP0008012	4.7 uH,M ,2.5*2*1.2 ,R/TP ,Coil ,; ,4.7 ,20% ,; ,1.3 ,0.338 ,; ,; ,SHIELD ,2.5X2X1MM ,[empty] ,R/TP ,Inductor,Wire Wound,Chip		
6	L500	INDUCTOR,CHIP	ELCH0004727	100 nH,J ,1005 ,R/TP ,		
6	L501	INDUCTOR,SMD,POWER	ELCP0008007	3.3 uH,N ,2.5*2.0*1.0 ,R/TP ,MLCI Power ,; ,3.3 ,30% ,; ,; ,; ,; ,; ,SHIELD ,2.5X2X1MM ,[empty] ,[empty] ,Inductor,Wire Wound,Chip		
6	L502	INDUCTOR,SMD,POWER	ELCP0008005	4.7 uH,M ,2.5X2.0X1.0 ,R/TP ,MLCI ,; ,; ,20% ,; ,; ,; ,; ,; ,SHIELD ,2.5X2X1MM ,[empty] ,R/TP ,Inductor,Wire Wound,Chip		
6	Q400	TR,FET,P-CHANNEL	EQFP0008601	DFN8 ,1.3 W,-20 V,-3.9 A,R/TP ,Intergrated power MOSFET with PNP Transistor		
6	R100	RES,CHIP	ERHY0009543	120 ohm,1/20W(0.05W) ,J ,0603 ,R/TP		
6	R101	RES,CHIP,MAKER	ERHZ0000456	2.2 ohm,1/16W ,J ,1005 ,R/TP		
6	R102	RES,CHIP,MAKER	ERHZ0000402	10 ohm,1/16W ,J ,1005 ,R/TP		
6	R103	RES,CHIP	ERHY0009543	120 ohm,1/20W(0.05W) ,J ,0603 ,R/TP		
6	R104	RES,CHIP	ERHY0009311	51 ohm,1/20W(0.05W) ,F ,0603 ,R/TP		

Level	Location No.	Description	Part Number	Spec	Color	Remark
6	R105	RES,CHIP	ERHY0009555	12 Kohm,1/20W(0.05W) ,F ,0603 ,R/TP		
6	R106	RES,CHIP	ERHY0009504	1 Kohm,1/20W(0.05W) ,J ,0603 ,R/TP		
6	R107	RES,CHIP	ERHY0019401	5.6 ohm,1/20W(0.05W) ,J ,0603 ,R/TP ,; ,5.6 ,5% ,1/20W ,0603 ,R/TP		
6	R108	RES,CHIP	ERHY0019401	5.6 ohm,1/20W(0.05W) ,J ,0603 ,R/TP ,; ,5.6 ,5% ,1/20W ,0603 ,R/TP		
6	R109	RES,CHIP,MAKER	ERHZ0000517	91 ohm,1/16W ,J ,1005 ,R/TP		
6	R110	RES,CHIP,MAKER	ERHZ0000512	82 ohm,1/16W ,J ,1005 ,R/TP		
6	R111	RES,CHIP,MAKER	ERHZ0000517	91 ohm,1/16W ,J ,1005 ,R/TP		
6	R112	CAP,CERAMIC,CHIP	ECCH0001001	6.8 pF,50V ,D ,NP0 ,TC ,1005 ,R/TP ,; , ,0.5PF ,50V ,NP0 ,[empty] ,1005 ,R/TP , mm		
6	R113	INDUCTOR,CHIP	ELCH0004715	27 nH,J ,1005 ,R/TP ,		
6	R114	PCB ASSY,MAIN,PAD SHORT	SAFP0000401			
6	R115	RES,CHIP,MAKER	ERHZ0000404	1 Kohm,1/16W ,J ,1005 ,R/TP		
6	R117	RES,CHIP	ERHY0009516	2.2 Kohm,1/20W(0.05W) ,J ,0603 ,R/TP		
6	R118	RES,CHIP	ERHY0000104	49.9 ohm,1/16W,F,1005,R/TP		
6	R119	RES,CHIP,MAKER	ERHZ0000504	68 ohm,1/16W ,J ,1005 ,R/TP		
6	R120	RES,CHIP,MAKER	ERHZ0000201	100 ohm,1/16W ,F ,1005 ,R/TP		
6	R121	RES,CHIP,MAKER	ERHZ0000201	100 ohm,1/16W ,F ,1005 ,R/TP		
6	R250	RES,CHIP,MAKER	ERHZ0000483	47 ohm,1/16W ,J ,1005 ,R/TP		
6	R251	RES,CHIP,MAKER	ERHZ0000463	33 ohm,1/16W ,J ,1005 ,R/TP		
6	R252	RES,CHIP,MAKER	ERHZ0000484	470 ohm,1/16W ,J ,1005 ,R/TP		
6	R253	RES,CHIP	ERHY0024201	6040 ohm,1/16W ,F ,1005 ,R/TP ,; ,6040 ,1% ,1/16W ,1005 ,R/TP		
6	R254	RES,CHIP	ERHY0000104	49.9 ohm,1/16W,F,1005,R/TP		
6	R255	RES,CHIP,MAKER	ERHZ0000405	10 Kohm,1/16W ,J ,1005 ,R/TP		
6	R256	RES,CHIP,MAKER	ERHZ0000405	10 Kohm,1/16W ,J ,1005 ,R/TP		
6	R257	RES,CHIP,MAKER	ERHZ0000243	2200 ohm,1/16W ,F ,1005 ,R/TP		
6	R259	RES,CHIP	ERHY0003301	100 ohm,1/16W ,J ,1005 ,R/TP		
6	R260	RES,CHIP	ERHY0003301	100 ohm,1/16W ,J ,1005 ,R/TP		
6	R261	RES,CHIP	ERHY0003301	100 ohm,1/16W ,J ,1005 ,R/TP		
6	R262	RES,CHIP	ERHY0003301	100 ohm,1/16W ,J ,1005 ,R/TP		
6	R263	RES,CHIP,MAKER	ERHZ0000204	100 Kohm,1/16W ,F ,1005 ,R/TP		
6	R264	RES,CHIP,MAKER	ERHZ0000437	2 Kohm,1/16W ,J ,1005 ,R/TP		

Level	Location No.	Description	Part Number	Spec	Color	Remark
6	R265	RES,CHIP	ERHY0003301	100 ohm,1/16W ,J ,1005 ,R/TP		
6	R266	RES,CHIP	ERHY0003301	100 ohm,1/16W ,J ,1005 ,R/TP		
6	R267	RES,CHIP	ERHY0003301	100 ohm,1/16W ,J ,1005 ,R/TP		
6	R269	RES,CHIP	ERHY0000105	51 ohm,1/16W,F,1005,R/TP		
6	R270	RES,CHIP,MAKER	ERHZ0000443	2200 ohm,1/16W ,J ,1005 ,R/TP		
6	R271	RES,CHIP,MAKER	ERHZ0000443	2200 ohm,1/16W ,J ,1005 ,R/TP		
6	R273	RES,CHIP,MAKER	ERHZ0000484	470 ohm,1/16W ,J ,1005 ,R/TP		
6	R274	RES,CHIP,MAKER	ERHZ0000484	470 ohm,1/16W ,J ,1005 ,R/TP		
6	R275	RES,CHIP,MAKER	ERHZ0000484	470 ohm,1/16W ,J ,1005 ,R/TP		
6	R276	RES,CHIP,MAKER	ERHZ0000484	470 ohm,1/16W ,J ,1005 ,R/TP		
6	R277	RES,CHIP,MAKER	ERHZ0000484	470 ohm,1/16W ,J ,1005 ,R/TP		
6	R284	RES,CHIP,MAKER	ERHZ0000406	100 Kohm,1/16W ,J ,1005 ,R/TP		
6	R286	RES,CHIP,MAKER	ERHZ0000222	150 Kohm,1/16W ,F ,1005 ,R/TP		
6	R287	RES,CHIP	ERHY0000290	300K ohm,1/16W,J,1005,R/TP		
6	R300	PCB ASSY,MAIN,PAD OPEN	SAFO0000501	0OHM_1005_DNI		
6	R301	RES,CHIP,MAKER	ERHZ0000406	100 Kohm,1/16W ,J ,1005 ,R/TP		
6	R302	RES,CHIP,MAKER	ERHZ0000406	100 Kohm,1/16W ,J ,1005 ,R/TP		
6	R303	PCB ASSY,MAIN,PAD SHORT	SAFP0000501			
6	R304	PCB ASSY,MAIN,PAD SHORT	SAFP0000501			
6	R305	PCB ASSY,MAIN,PAD SHORT	SAFP0000501			
6	R400	RES,CHIP,MAKER	ERHZ0000485	4700 ohm,1/16W ,J ,1005 ,R/TP		
6	R402	RES,CHIP,MAKER	ERHZ0000437	2 Kohm,1/16W ,J ,1005 ,R/TP		
6	R403	RES,CHIP,MAKER	ERHZ0000437	2 Kohm,1/16W ,J ,1005 ,R/TP		
6	R404	RES,CHIP,MAKER	ERHZ0000510	750 ohm,1/16W ,J ,1005 ,R/TP		
6	R405	RES,CHIP,MAKER	ERHZ0000288	470 Kohm,1/16W ,F ,1005 ,R/TP		
6	R406	RES,CHIP,MAKER	ERHZ0000537	680000 ohm,1/16W ,F ,1005 ,R/TP		
6	R407	RES,CHIP,MAKER	ERHZ0000318	80.6 Kohm,1/16W ,F ,1005 ,R/TP		
6	R408	RES,CHIP,MAKER	ERHZ0003901	0.1 ohm,1/4W ,F ,2012 ,R/TP ,; ,0.1 ,1% ,1/4W ,2012 ,R/TP		
6	R409	RES,CHIP	ERHY0000161	200K ohm,1/16W,F,1005,R/TP		
6	R410	RES,CHIP,MAKER	ERHZ0000401	0 ohm,1/16W ,J ,1005 ,R/TP		

Level	Location No.	Description	Part Number	Spec	Color	Remark
6	R411	RES,CHIP,MAKER	ERHZ0000222	150 Kohm,1/16W ,F ,1005 ,R/TP		
6	R412	RES,CHIP,MAKER	ERHZ0000488	4.7 ohm,1/16W ,J ,1005 ,R/TP		
6	R413	RES,CHIP,MAKER	ERHZ0000265	300 Kohm,1/16W ,F ,1005 ,R/TP		
6	R414	RES,CHIP,MAKER	ERHZ0004201	121000 ohm,1/16W ,F ,1005 ,R/TP		
6	R415	RES,CHIP	ERHY0000105	51 ohm,1/16W,F,1005,R/TP		
6	R416	RES,CHIP,MAKER	ERHZ0000405	10 Kohm,1/16W ,J ,1005 ,R/TP		
6	R417	RES,CHIP,MAKER	ERHZ0000404	1 Kohm,1/16W ,J ,1005 ,R/TP		
6	R418	RES,CHIP,MAKER	ERHZ0000406	100 Kohm,1/16W ,J ,1005 ,R/TP		
6	R421	RES,CHIP,MAKER	ERHZ0000493	51 Kohm,1/16W ,J ,1005 ,R/TP		
6	R500	RES,CHIP,MAKER	ERHZ0000295	51 Kohm,1/16W ,F ,1005 ,R/TP		
6	R501	RES,CHIP,MAKER	ERHZ0000295	51 Kohm,1/16W ,F ,1005 ,R/TP		
6	R502	RES,CHIP	ERHY0003201	1000 ohm,1/16W ,F ,1005 ,R/TP		
6	R503	RES,CHIP,MAKER	ERHZ0000310	680 ohm,1/16W ,F ,1005 ,R/TP		
6	R504	RES,CHIP,MAKER	ERHZ0000222	150 Kohm,1/16W ,F ,1005 ,R/TP		
6	R505	RES,CHIP,MAKER	ERHZ0000222	150 Kohm,1/16W ,F ,1005 ,R/TP		
6	R511	RES,CHIP	ERHY0000254	4.7K ohm,1/16W,J,1005,R/TP		
6	R512	RES,CHIP	ERHY0000254	4.7K ohm,1/16W,J,1005,R/TP		
6	R513	RES,CHIP,MAKER	ERHZ0000206	10 ohm,1/16W ,F ,1005 ,R/TP		
6	R514	RES,CHIP,MAKER	ERHZ0000206	10 ohm,1/16W ,F ,1005 ,R/TP		
6	R515	RES,CHIP,MAKER	ERHZ0000422	15 Kohm,1/16W ,J ,1005 ,R/TP		
6	R516	RES,CHIP,MAKER	ERHZ0000406	100 Kohm,1/16W ,J ,1005 ,R/TP		
6	R518	RES,CHIP,MAKER	ERHZ0000435	20 ohm,1/16W ,J ,1005 ,R/TP		
6	R519	RES,CHIP,MAKER	ERHZ0000435	20 ohm,1/16W ,J ,1005 ,R/TP		
6	R520	RES,CHIP,MAKER	ERHZ0000434	1 ohm,1/16W ,J ,1005 ,R/TP		
6	R521	RES,CHIP,MAKER	ERHZ0000434	1 ohm,1/16W ,J ,1005 ,R/TP		
6	R526	RES,CHIP,MAKER	ERHZ0000406	100 Kohm,1/16W ,J ,1005 ,R/TP		
6	R529	RES,CHIP,MAKER	ERHZ0000401	0 ohm,1/16W ,J ,1005 ,R/TP		
6	R602	RES,CHIP,MAKER	ERHZ0000406	100 Kohm,1/16W ,J ,1005 ,R/TP		
6	R609	RES,CHIP,MAKER	ERHZ0000485	4700 ohm,1/16W ,J ,1005 ,R/TP		
6	R610	RES,CHIP,MAKER	ERHZ0000485	4700 ohm,1/16W ,J ,1005 ,R/TP		
6	R611	RES,CHIP,MAKER	ERHZ0000405	10 Kohm,1/16W ,J ,1005 ,R/TP		
6	R612	RES,CHIP,MAKER	ERHZ0000406	100 Kohm,1/16W ,J ,1005 ,R/TP		

Level	Location No.	Description	Part Number	Spec	Color	Remark
6	SW100	CONN,RF SWITCH	ENWY0007901	,SMD , dB, =3.0, H=1.8, (3.2*3.0) ,; ,0.13MM ,STRAIGHT ,RF ADAPTER ,[empty] ,[empty] ,[empty] , ,		
6	U100	RF MODULE,HANDSET	SMRH0006201	MHz, MHz, ,POLA EDGE QUAD TX MODULE, SP9T, 6.0*6.0*1.0, 28p		
6	U101	IC	EUSY0344001	QFN ,68 ,R/TP ,Quad GSM, Tri WCDMA RF Transceiver ,; ,IC,Tx/Rx		
6	U102	MODULE,ETC	SMZY0025501	3.3*2.1*1.0, FILTER+GPS LNA+FILTER MODULE ,; ,GPS		
6	U104	PAM	SMPY0020601	28 dBm,40 %,30 mA,-36 dBc,26.5 dB,3x3x1.0 ,SMD ,3G Sinlge Band 8 3x3 coupler integrated ,; , , , , , , , ,LGA ,R/TP ,		
6	U105	PAM	SMPY0020701	27.5 dBm, %, A, dBc, dB,3x3x1.0 ,SMD ,3x3 Single Band 1 PAM coupler integrated ,; , , , , , , , ,LGA ,R/TP ,		
6	U250	IC	EUSY0306201	Micro pak ,8 PIN,R/TP ,D Flip Flip		
6	U251	IC	EUSY0216301	SC70 ,5 PIN,R/TP ,Single 2-Input NAND Gate		
6	U252	IC	EUSY0392302	560 NSP ,12 ,R/TP ,ARM11(600M),UPA5.7,FWGA,8M,WVGA30fps,WM,BMP,Android ,; ,IC,Digital Baseband Processor		
6	U300	IC	EUSY0405102	FBGA ,137 ,ETC ,FULLY 1.8V 4G(LB/256Mx16) NAND+2G(DDR400/16Mx4x32) SDRAM ,; ,IC,MCP		
6	U400	IC	EUSY0407201	SSON004 ,4 ,R/TP ,3.3V 150mA Single LDO ,; ,IC,LDO Voltage Regulator		
6	U401	IC	EUSY0371201	WLP ,20 ,R/TP ,MUIC for 5Pin Micro USB ,; ,IC,Analog Switch		
6	U402	IC	EUSY0374601	TDFN ,8 ,R/TP ,Programmable OVP ,; ,IC,Charger		
6	U403	IC	EUSY0342201	CSP ,137 PIN,R/TP ,PMIC, for MSM7xxx ,; ,IC,PMIC		
6	U501	IC	EUSY0404001	BGA ,8 ,R/TP ,Class AB SPK Amp ,; ,IC,Audio Amplifier		
6	U502	IC	EUSY0407101	SSON004 ,4 ,R/TP ,2.8V 150mA Single LDO ,; ,IC,LDO Voltage Regulator		
6	U503	MODULE,ETC	SMZY0024901	WiFi 11bg+BT+FM Module 9x7.8 x1.2,54pin,BCM4325D1 ,; ,WLAN		
6	U504	IC	EUSY0407201	SSON004 ,4 ,R/TP ,3.3V 150mA Single LDO ,; ,IC,LDO Voltage Regulator		
6	U600	IC	EUSY0345201	3*3 QFN ,10 PIN,R/TP ,3xis Accelerometer ,; ,IC,A/D Converter		
6	U601	IC	EUSY0344404	QFN ,14 ,R/TP ,2X2,6CH ,; ,IC,Charge Pump		
6	U603	IC	EUSY0391601	UDFN6 ,6 ,R/TP ,Level shifter ,; ,IC,Bus Controller		
6	VA250	VARISTOR	SEVY0004401	18 V, ,SMD ,40pF, 1005		
6	VA251	VARISTOR	SEVY0004401	18 V, ,SMD ,40pF, 1005		
6	VA252	VARISTOR	SEVY0004201	14 V, ,SMD ,120pF, 1005		
6	VA253	VARISTOR	SEVY0004401	18 V, ,SMD ,40pF, 1005		

Level	Location No.	Description	Part Number	Spec	Color	Remark
6	VA254	VARISTOR	SEVY0004401	18 V, ,SMD ,40pF, 1005		
6	VA255	VARISTOR	SEVY0004401	18 V, ,SMD ,40pF, 1005		
6	VA256	VARISTOR	SEVY0004401	18 V, ,SMD ,40pF, 1005		
6	VA401	VARISTOR	SEVY0004201	14 V, ,SMD ,120pF, 1005		
6	VA600	VARISTOR	SEVY0004401	18 V, ,SMD ,40pF, 1005		
6	VA602	VARISTOR	SEVY0004401	18 V, ,SMD ,40pF, 1005		
6	VA603	VARISTOR	SEVY0004401	18 V, ,SMD ,40pF, 1005		
6	VA604	VARISTOR	SEVY0004401	18 V, ,SMD ,40pF, 1005		
6	VA605	VARISTOR	SEVY0004401	18 V, ,SMD ,40pF, 1005		
6	VA606	VARISTOR	SEVY0004401	18 V, ,SMD ,40pF, 1005		
6	VA607	VARISTOR	SEVY0004401	18 V, ,SMD ,40pF, 1005		
6	VA608	VARISTOR	SEVY0004401	18 V, ,SMD ,40pF, 1005		
6	VA609	VARISTOR	SEVY0004401	18 V, ,SMD ,40pF, 1005		
6	X250	VCTCXO	EXSK0008901	19.2 MHz,1.5 PPM,40 pF,SMD ,3.2*2.5*1.0 ,19.2M VCTCXO,Vin=2.8, Pb-Free ,; ,19.2MHz ,2PPM ,2.8V ,3.2 ,2.5 ,1.0 , ,SMD ,R/TP		
6	X400	X-TAL	EXXY0024301	32.768 KHz,20 PPM,12.5 pF,70 Kohm,SMD ,3.2*1.5*0.9 ,-40'C ~ +85'C, C0 1.05pF, C1 fF ,; ,32.768 ,20PPM ,12.5 , , ,SMD ,R/TP		
6	X500	TCXO	EXST0001901	26 MHz,2.5 PPM,10 pF,SMD ,32*15*1.0 ,TI_WL1251 ,; , ,2.5PPM ,2.8V , , , , ,SMD ,R/TP		
6	ZD400	DIODE,TVS	EDTY0008602	SOD-323 ,13.3 V,400 W,R/TP ,PB-FREE		
6	ZD401	DIODE,TVS	EDTY0008601	SOD-323 ,6 V,400 W,R/TP ,PB-FREE		
5	SAFD00	PCB ASSY,MAIN,SMT TOP	SAFD0139201			
6	C173	CAP,CHIP,MAKER	ECZH0000813	100 pF,50V ,J ,NP0 ,TC ,1005 ,R/TP		
6	C174	CAP,CERAMIC,CHIP	ECCH0002001	0.1 uF,6.3V ,K ,B ,HD ,1005 ,R/TP , , ,[empty] ,[empty] ,[empty] ,[empty] ,[empty] ,[empty] ,.5 mm		
6	C503	CAP,CHIP,MAKER	ECZH0000830	33 pF,50V ,J ,NP0 ,TC ,1005 ,R/TP		
6	C504	CAP,CERAMIC,CHIP	ECCH0000161	33 nF,16V,K,X7R,HD,1005,R/TP		
6	C505	CAP,CERAMIC,CHIP	ECCH0000161	33 nF,16V,K,X7R,HD,1005,R/TP		
6	C506	CAP,CERAMIC,CHIP	ECCH0000122	47 pF,50V,J,NP0,TC,1005,R/TP		
6	C509	CAP,CERAMIC,CHIP	ECCH0000120	39 pF,50V,J,NP0,TC,1005,R/TP		
6	C529	CAP,TANTAL,CHIP	ECTH0003701	10 uF,6.3V ,M ,L_ESR ,1608 ,R/TP		
6	C560	CAP,CERAMIC,CHIP	ECCH0000122	47 pF,50V,J,NP0,TC,1005,R/TP		
6	C561	CAP,CERAMIC,CHIP	ECCH0000122	47 pF,50V,J,NP0,TC,1005,R/TP		

Level	Location No.	Description	Part Number	Spec	Color	Remark
6	C562	CAP,CERAMIC,CHIP	ECCH0000137	330 pF,50V ,K ,X7R ,HD ,1005 ,R/TP		
6	C563	CAP,CERAMIC,CHIP	ECCH0000112	15 pF,50V,J,NP0,TC,1005,R/TP		
6	C610	CAP,CHIP,MAKER	ECZH0003103	0.1 uF,10V ,K ,X7R ,HD ,1005 ,R/TP		
6	C611	CAP,CHIP,MAKER	ECZH0003103	0.1 uF,10V ,K ,X7R ,HD ,1005 ,R/TP		
6	D501	DIODE,TVS	EDTY0010101	SOD-923 ,5 V,300 mW,R/TP ,15pF ,; , ,5.8V(MIN) ,12.5V(1A) ,40A ,300mW ,[empty] ,[empty] ,2P ,2		
6	D502	DIODE,TVS	EDTY0010101	SOD-923 ,5 V,300 mW,R/TP ,15pF ,; , ,5.8V(MIN) ,12.5V(1A) ,40A ,300mW ,[empty] ,[empty] ,2P ,2		
6	D503	DIODE,TVS	EDTY0010101	SOD-923 ,5 V,300 mW,R/TP ,15pF ,; , ,5.8V(MIN) ,12.5V(1A) ,40A ,300mW ,[empty] ,[empty] ,2P ,2		
6	D504	DIODE,TVS	EDTY0010101	SOD-923 ,5 V,300 mW,R/TP ,15pF ,; , ,5.8V(MIN) ,12.5V(1A) ,40A ,300mW ,[empty] ,[empty] ,2P ,2		
6	D505	DIODE,TVS	EDTY0010101	SOD-923 ,5 V,300 mW,R/TP ,15pF ,; , ,5.8V(MIN) ,12.5V(1A) ,40A ,300mW ,[empty] ,[empty] ,2P ,2		
6	D606	DIODE,TVS	EDTY0009801	SOT-963 ,5 V,25 W,R/TP , ,; , , , , , ,[empty] ,[empty] ,2P ,1		
6	FB502	FILTER,BEAD,CHIP	SFBH0008105	1800 ohm,1005 ,Chip bead ,; ,1800ohm ,; ,[empty] ,R/TP		
6	FB503	FILTER,BEAD,CHIP	SFBH0008105	1800 ohm,1005 ,Chip bead ,; ,1800ohm ,; ,[empty] ,R/TP		
6	FB504	FILTER,BEAD,CHIP	SFBH0008105	1800 ohm,1005 ,Chip bead ,; ,1800ohm ,; ,[empty] ,R/TP		
6	FL112	FILTER,SAW	SFSY0033403	1575.42 MHz,1.4*1.1*0.4 ,SMD ,1574.42M~1576.42M, IL 1.2, 5pin, U-U, 50-50, GPS HIGH ATTEN. ,; ,1575.42 ,1.4*1.1*0.4 ,SMD ,R/TP		
6	L120	INDUCTOR,CHIP	ELCH0004709	3.3 nH,S ,1005 ,R/TP ,		
6	L503	INDUCTOR,CHIP	ELCH0010402	270 nH,M ,1005 ,R/TP ,CHIP		
6	R506	RES,CHIP,MAKER	ERHZ0000443	2200 ohm,1/16W ,J ,1005 ,R/TP		
6	R507	RES,CHIP,MAKER	ERHZ0000404	1 Kohm,1/16W ,J ,1005 ,R/TP		
6	R508	RES,CHIP,MAKER	ERHZ0000201	100 ohm,1/16W ,F ,1005 ,R/TP		
6	R509	RES,CHIP,MAKER	ERHZ0000201	100 ohm,1/16W ,F ,1005 ,R/TP		
6	R510	RES,CHIP,MAKER	ERHZ0000443	2200 ohm,1/16W ,J ,1005 ,R/TP		
6	R531	RES,CHIP	ERHY0003301	100 ohm,1/16W ,J ,1005 ,R/TP		
6	R536	RES,CHIP	ERHY0000161	200K ohm,1/16W,F,1005,R/TP		
6	R537	RES,CHIP,MAKER	ERHZ0000405	10 Kohm,1/16W ,J ,1005 ,R/TP		
6	R538	RES,CHIP,MAKER	ERHZ0000405	10 Kohm,1/16W ,J ,1005 ,R/TP		
6	R539	RES,CHIP	ERHY0003301	100 ohm,1/16W ,J ,1005 ,R/TP		
6	R540	RES,CHIP,MAKER	ERHZ0000445	220 Kohm,1/16W ,J ,1005 ,R/TP		
6	R603	RES,CHIP	ERHY0000254	4.7K ohm,1/16W,J,1005,R/TP		

Level	Location No.	Description	Part Number	Spec	Color	Remark
6	R604	RES,CHIP	ERHY0000254	4.7K ohm,1/16W,J,1005,R/TP		
6	R605	RES,CHIP,MAKER	ERHZ0000201	100 ohm,1/16W ,F ,1005 ,R/TP		
6	R606	RES,CHIP,MAKER	ERHZ0000201	100 ohm,1/16W ,F ,1005 ,R/TP		
6	R607	RES,CHIP,MAKER	ERHZ0000201	100 ohm,1/16W ,F ,1005 ,R/TP		
6	R608	RES,CHIP,MAKER	ERHZ0000201	100 ohm,1/16W ,F ,1005 ,R/TP		
6	SPFY	PCB,MAIN	SPFY0221301	FR-4 ,0.8 mm,LX-BUMP 10 , ,; , , , , , , , , ,		
6	U602	IC	EUSY0385501	,15 ,R/TP ,2.5*2.5, BGA ,; ,IC,PMIC		
6	VA501	VARISTOR	SEVY0004401	18 V, ,SMD ,40pF, 1005		
6	VA502	VARISTOR	SEVY0004401	18 V, ,SMD ,40pF, 1005		
6	VA503	VARISTOR	SEVY0004401	18 V, ,SMD ,40pF, 1005		
6	VA504	VARISTOR	SEVY0004401	18 V, ,SMD ,40pF, 1005		
6	VA505	VARISTOR	SEVY0004401	18 V, ,SMD ,40pF, 1005		
6	VA506	VARISTOR	SEVY0004301	18 V, ,SMD ,10pF, 1005		
3	SVLM	LCD MODULE	SVLM0038001	Main ,3.0 ,320*480 ,47.04*73.81*1.9t ,16.7M ,TFT ,TM ,S6D05A0 , ,		

12.3 Accessory

Note: This Chapter is used for reference, Part order is ordered by SBOM standard on GCSC

Level	Location No.	Description	Part Number	Spec	Color	Remark
3	SBPP	BATTERY PACK,LI-POLYMER	SBPP0027401	3.7 V,1500 mAh,1 CELL,PRISMATIC ,454261 WW LABEL ,; , , , ,PRISMATIC , , ,BLACK , ,	GRAY	
3	SGDY	DATA CABLE	SGDY0016701	; ,[empty] ,[empty] ,[empty] ,microUSB[5Pin], USB plug A Type ,BLACK , ,[empty]		
3	SGEY	EAR PHONE/EAR MIKE SET	SGEY0003744	; ,RMS 20mW(0.56V,RMS) ,16Ohm+-2.4Ohm 1KHZ ,116dB+-3dB 1KHZ,3mW ,116dB 1KHZ ,96dB 100HZ ,[empty] ,BLACK ,PLUG ,GM310, ,Earphone,Stereo		
3	SSAD01	ADAPTOR,AC-DC	SSAD0032201	100-240V ,5060 Hz,5.1 V,0.7 A,CE, GOST ,STA-U12RD, Russia, Cableless ,; , ,5.1V ,0.7A , , ,WALL 2P ,USB ,		
3		ADAPTOR,AC-DC	SSAD0032202	100-240V ,5060 Hz,5.1 V,0.7 A,CB / GOST ,AC-DC ADAPTOR ,; ,90Vac~350Vac ,5.1Vdc ,700mA ,5060 , ,WALL 2P ,USB ,		